RAMSEY-WASHINGTON
METRO WATERSHED DISTRICT

March 2025
Board Packet

****

Agenda

****

RAMSEY-WASHINGTON
METRO WATERSHED DISTRICT

Regular Board Meeting Agenda

Wednesday, March 5, 2025

6:30 PM

This month's meeting will be held at the district office (2665 Noel Drive, Little Canada, MN) and via Zoom's video conferencing platform. Board members, staff, consultants, and the general public can join in person OR via video and/or phone. The public can listen to the meeting but not participate, with the exception of the visitor comments portion of the agenda. Instructions for joining the Zoom meeting can be found after the agenda.

1. Call to Order – 6:30 PM
2. **Approval of Agenda *(pg. 3)***
3. **Consent Agenda: To all be approved with one motion unless removed from the consent agenda for discussion.**
    A. Approval of Regular Meeting Minutes February 5, 2025 *(pg. 7)*
    B. Approval of Special Workshop Meeting Minutes February 24, 2025 *(pg. 13)*
    C. Treasurer's Report and Bill List *(pg. 14)*
    D. Permit Program
        i. 25-04 Papenheims Victoria Valley Orchard, Shoreview *(pg. 31)*
        ii. 25-06 North St. Paul Street Improvement Project *(pg. 37)*
    E. Stewardship Grant Program
        i. 25-07 CS Stephens *(pg. 43)*
    F. 2025 Capital Improvements Project (CIP) – Change Order No. 1 (*pg. 45)*
4. Visitor Comments (limited to 4 minutes each)
5. Permit Program
    A. Applications
        i. 25-05 Ramsey County Bruce Vento Trail Extension, White Bear Lake *(pg. 57)*
    B. Permit Program Monthly Memorandum *(pg. 73)*
6. Stewardship Grant Program
    A. Applications – None
    B. Budget Status Update *(pg. 77)*
7. Action Items
    A. **Board of Managers Annual Meeting *(pg. 79)***
    B. **Roosevelt Homes Phase 3 Advertise for Bid *(pg. 93)***
    C. **Maplewood Toyota and Cochran Recovery Services Advertise for Bid *(pg. 123)***
8. Attorney Report
9. Board Discussion Topics
10. New Reports and/or Presentations
    A. 2025 Engineering Services Story Map Walkthrough (linked here)
11. Administrator's Report *(pg. 148)*
    A. Meetings Attended
    B. Upcoming Meetings and Dates
    C. Staff Anniversaries
    D. Board Action Log

E. Minnesota Watersheds Special Meeting

12. Project and Program Status Reports *(pg. 166)*

Project Feasibility Studies

A. Manufactured Homes Resilience Evaluation
B. Street Sweeping
C. Flood Risk Reduction Feasibility Study: Roseville Central Park

Watershed Management Plan Update

D. Watershed Management Plan Update: Phase 1- Stakeholder Engagement

Research Projects

E. Wakefield Lake Aeration Feasibility Study

Project Operations

F. 2025 Tanners Alum Facility Monitoring
G. Lake-Level Station Maintenance and Rain Gauge Installation
H. Lake-Level Station Forecast Integration

Capital Improvements

I. Roosevelt Homes
J. Targeted Retrofit Projects 2025
K. Stewardship Grant Program
L. Pioneer Park Stormwater Reuse
M. Fish Creek Tributary Improvements
N. Cottage Place Wetland Regeneration
O. County Road C Culvert Replacement
P. Kohlman Creek Storage and Detention
Q. Lake Wabasso Outlet Replacement
R. Kohlman Lake Alum Treatment

CIP Project Repair and Maintenance

S. 2025 CIP Maintenance and Repairs
T. Beltline Mississippi Branch Outfall Replacement Project
U. Beltline and Battle Creek Storm Sewer Five-Year Inspection and Beltline Detailed Survey

Program Updates

V. Natural Resources Program
W. Communications and Engagement Program
X. Citizen Advisory Committee

13. Manager Comments and Next Month's Meeting
14. **Adjourn**

RAMSEY-WASHINGTON
METRO WATERSHED DISTRICT

NOTICE OF BOARD MEETING
Wednesday, March 5th, 2025
6:30 PM
Hybrid Meeting: In-Person and Web Conference

This month's meeting will be held at the District office (2665 Noel Drive, Little Canada, MN) AND via the video conferencing platform Zoom. Board members, staff, consultants, and general public will be able to join in person or via Zoom. The public will be able to listen to meeting but not participate with the exception of the visitor comments portion of the agenda. Visitor comment may be given in person or via Zoom. Instructions for joining in on the Zoom meeting can be found below.

To access the meeting via webcast, please use this link: **https://us02web.zoom.us/j/85317264354**

The meeting room will open at 6:20 pm with the meeting starting at 6:30 pm. To connect to audio, you may choose to use your computer audio options or you may use your mobile device to call. The phone access number is **(312) 626-6799**. The Meeting ID is **853 1726 4354**. The meeting password is **516851**. If you have any questions, please contact Tina Carstens at tina.carstens@rwmwd.org.

****

Consent Agenda

****

RAMSEY-WASHINGTON
METRO WATERSHED DISTRICT

Ramsey-Washington Metro Watershed District
Minutes of Regular Board Meeting
February 5, 2025

The Regular Meeting of February 5, 2025, was held at the District Office Board Room, 2665 Noel Drive, Little Canada, Minnesota, and via Zoom web conferencing at 6:30 p.m. A video recording of the meeting can be found at https://youtu.be/0Xdlda2cLNA. Video time stamps are included after each agenda item in minutes.

PRESENT:
Val Eisele, President
Ben Karp, Vice President
Mark Gernes, Secretary
Matt Kramer, Treasurer
Stephanie Wang, Manager

ABSENT:

ALSO PRESENT:

Staff:
Tina Carstens, District Administrator
Paige Ahlborg, Assistant Administrator
Nicole Maras, Regulatory Program Manager
Kyle Kubitza, Monitoring Technician
Paul Erdmann, Natural Resources Program Manager
Kendra Kloth, Regulatory Technician
Ashlee Ricci, Grant Program Specialist
David Vlasin, Project Coordinator

Consultants:
Tracey Galowitz, Attorney for District
Erin Anderson Wenz, Barr Engineering

Visitors:

DRAFT

1. CALL TO ORDER
The meeting was called to order by President Eisele at 6:30 p.m.

2. APPROVAL OF AGENDA (0:12)

Motion: Manager Kramer moved, Manager Karp seconded, to approve the agenda.

Motion carried unanimously.

3. RECOGNITION OF OUTGOING BOARD MEMBER – MATT KRAMER (0:27)
President Eisele expressed appreciation for Manager Kramer's service on the RWMWD Board of Managers.

4. CONSENT AGENDA (1:10)
A. Approval of Minutes from January 8, 2025
B. Treasurer's Report and Bill List
C. Stewardship Grant Program
   i. 25-02 CS Gable
   ii. 25-03 CS Gilchrist

iii. 25-04 CS Terry

D. Beltline Mississippi River Branch Repairs – Change Order No. 2

E. District Liability Insurance Coverage Waiver

Motion: Manager Gernes moved, Manager Kramer seconded to approve the consent agenda.

Motion carried unanimously.

4. VISITOR COMMENTS (2:55)

No comments.

5. PERMIT PROGRAM (02:59)

A. Applications

i. 25-03 Keller Golfview Parking Improvements, Maplewood

Nicole Maras provided details of the permit application 25-03 Keller Golfview Parking Improvements, Maplewood. Nicole stated that this permit is related to permit 24-26 Ramsey County Keller Park Tuj Lub Expansion. Nicole stated that this application is to provide better parking, accessibility and lighting to the Keller Park Tub Lub courts.

Motion: Manager Kramer moved, Manager Wang seconded to approve permit application 25-03 Keller Golfview Parking Improvement, Maplewood.

Manager Wang - Aye

Manager Gernes - Aye

Manager Kramer - Aye

President Eisele - Aye

Manager Karp - Abstained

Motion approved.

B. Permit Program Monthly Memorandum

Nicole Maras provided details of the monthly memorandum. Nicole noted that there are still a few active sites but there had been a slowdown in active sites due to the season. Nicole noted that Kendra Kloth and Mary Fitzgerald attended the Minnesota Erosion Control Conference held in St. Cloud, MN. Nicole provided information on the of workshops attended at the conference.

6. STEWARDSHIP GRANT PROGRAM (7:57)

A. Applications – None.

B. Budget Status Update

Ashlee Ricci provided an update on the Stewardship Grant Program budget status. Ashlee noted that six applications had been received with three of those applications included on the February consent agenda. Ashlee pointed out a reduction in maintenance grants and explained the reduction was due to maintenance grants reaching the end of their 5-year lifespan.

7. ACTION ITEMS - NONE

8. ATTORNEY REPORT (13:28)

DRAFT

Tracey Galowitz provided details of the work the attorney's office completed throughout the past month which included recording of the Fish Creek easements, looking into a payment bond and working on an access agreement form.

9. BOARD DISCUSION TOPICS (16:30)

No comments.

10. NEW REPORTS AND/OR PRESENTATIONS

A. 2024 Enhanced Street Sweeping Program Summary (18:56)

Paige Ahlborg reviewed the 2024 enhanced street sweeping program summary. Paige stated that the program is going well, and the cities involved were very excited about the program. Paige noted that there had been a change in the funding allocation due to the City of St. Paul performing 90% of their sweeping outside of the District. The District provided funds for the sweeping that had been completed with District boundaries. Originally, $100,000 had been allocated for the City of St. Paul; the final funding amount provided was $10,000. Paige continued to provide updates on the planning for the street sweeping program in 2025.

Erin Anderson-Wenz provided details on sampling and testing that had been performed by the City of Roseville through their street sweeping program. Erin stated that the data collected in the samples were compared to the PCA street sweeping phosphorus credit calculator and found that they were relatively similar.

President Eisele asked if the recommendations given to the Cities were followed and if so, what the numbers were for those recommended street sweeping locations.

Paige Ahlborg stated that the Cities went with an all-inclusive approach. Paige explained that there had been enough funding for Cities to not only complete sweeping in the recommended priority areas but also sweep their entire cities.

Manager Gernes asked for more information on the design of the data and if a better understanding of best strategies, techniques and equipment would arise from the information to further improve the program.

Paige Ahlborg stated that the Cities involved in the program are meeting the baselines laid out in the program, noting that it is always good to collect the data and use it to help improve the program.

President Eisele stated that he would like to see if there is any correlation between the street sweeping success and improvement of water quality in the near by impaired lakes.

Tina Carstens stated that the data would go into the TMDL reporting for the impaired waters.

B. Kohlman Lake Alum Treatment Project Update Memo (36:14)

Erin Anderson Wenz provided details on the previous treatment of Kohlman Lake noting that an alum treatment had been completed in 2010. Erin explained that there had been intensive management of the macrophytes in the lake. Erin stated the macrophytes found included Eurasian water milfoil and curly leaf pondweed, noting the direct impact they have on water quality. Erin stated that after the first alum treatment water quality significantly improved and remained clear for nearly 13 years and Kohlman Lake had been removed from the impaired waters list. Erin explained that the alum treatment does erode over time which allowed for the water quality to degrade indicating a need for another alum treatment. Erin went on to provide details on the options available for lake treatment, which included spot treatments and alum treatments.

President Eisele questioned if spot treatments would be manageable or if a full treatment to reduce the curly leaf pond weed in the lake.

Erin Anderson Wenz stated that over the last few years there had been a number of spot treatments being completed by the local resident's lake association. Erin stated a conversation would need to take place with the DNR to see what

treatments had been completed previously by the lake association as well as to gain an understanding of where and how much treatment had applied. Erin provided more details on what could happen when the treatments are applied, including a clearer water column which would promote a more diversity in the macrophytes found in the lake.

Manager Wang asked for more details on the engagement process with the residents.

Tina Carstens provided more information on the communications that had already taken place with residents and the lake association. Tina stated that residents have been supportive of an alum treatment, but more work would be done to further explain how the alum treatment would affect the lake.

Manager Kramer questioned if it made sense financially for the District to complete repeated alum treatments at Kohlman Lake. Manager Kramer noted that this will likely need to be address again in the future due to alum treatments not being a permanent solution.

Manger Wang questioned if cost sharing had been discussed with the lake association.

Tina Carstens explained that because Kohlman Lake is the beginning of a chain of lakes the water quality does affect other bodies of water further down the chain. Tina stated that the district had invested in the alum treatments due to the effect on all the waterbodies within the chain. Tina stated that special assessments had not been done in the past, but it could be something that happens in the future.

Manager Gernes questioned if harmful algae blooms had been seen in the lake.

Tina Carstens stated that she was not aware of any harmful algae blooms in Kohlman Lake.

President Eisele stated he thought it would be good to revisit the return on investment for an alum treatment at Kohlman Lake.

C. New Technology Topic Memo: Aeration (1:01:25)

Erin Anderson Wenz provided background on the memo stating that there had been a lot of interest after presentations that were given at the Minnesota Watersheds Conference. Erin stated that a deeper dive into the nanobubble technology had been completed due to a lack of peer reviewed research with this being a new technology. Erin went on to provide information on the different aeration technologies available discussing their methods, costs, benefits and limitations.

President Eisele questioned how often negative side effects are seen from aeration.

Erin Anderson Wenz stated that it is rare to see an aeration system used to oxygenate an entire lake. Erin explained that since it is done on a small scale larger problems on not commonly seen. Erin provided more information on the negative side effects that could occur from aeration.

President Eisele stated that he liked that the District looks at using innovative technology. President Eisele stated that he felt there would be a struggle working through this with the lack of evidence on the efficacy of nanobubble aeration technologies.

D. Phalen and Keller Lake Level Forecast Integration Scope Summary (1:19:44)

Tina Carstens provided an overview of the Phalen and Keller Lake level forecast integration scope summary. Tina explained that the goal would be to develop a tool that would be used to automate the control structures on Keller Channel and Lake Phalen.

President Eisele stated that he would like to ensure that there is a fail safe if something were to happen.

DRAFT

Manager Wang asked how often the controls were used to change lake levels.

Tina Carstens explained that due to continuous dry years since the lake level controls installation it had not been used often.

11. ADMINISTRATOR'S REPORT (1:24:54)

A. Meetings Attended

No comments

B. Upcoming Meetings and Dates

No comments.

C. Staff Anniversaries

No comments.

D. Board Action Log

No comments.

E. District DEIA Planning Process

No comments.

F. Minnesota Watersheds Legislative Event Discussion

No comments.

12. PROJECT AND PROGRAM STATUS REPORTS (1:51:12)

Project Feasibility Studies

A. Manufactured Homes Resilience Evaluation
B. Street Sweeping
C. Flood Risk Reduction Feasibility Study: Roseville Central Park

Watershed Management Plan Update

D. Watershed Management Plan Update: Phase 1-Steakholder Engagement

Research Projects

E. New-Technology Mini Case Studies
F. Wakefield Lake Aeration Feasibility Study

Project Operations

G. Lake-Level Station Maintenance and Rain Gauge Installation

Capital Improvements

H. Roosevelt Homes
I. Targeted Retrofit Projects 2025
J. Stewardship Grant Program
K. Pioneer Park Stormwater Reuse
L. Fish Creek Tributary Improvements
M. Cottage Place Wetland Regeneration
N. County Road C Culvert Replacement
O. Kohlman Creek Storage and Detention
P. Kohlman Lake Alum Treatment
Q. Lake Wabasso Outlet Replacement

CIP Project Repair and Maintenance

R. Routine CIP Inspection and Unplanned Maintenance Identification
S. 2025 CIP Maintenance and Repairs

DRAFT

T. Beltline and Battle Creek Storm Sewer Five-Year Inspections and Beltline Detailed Survey
U. Beltline Mississippi Branch Outfall Replacement Project

Program Updates

V. Natural Resources Program
W. Communications and Engagement Program

13. MANAGER COMMENTS AND NEXT MONTH'S MEETING (2:05:46)

No comments.

14. ADJOURN

Motion: Manager Wang moved, Manager Gernes seconded, to adjourn the meeting at 8:37 p.m. Motion carried unanimously.

DRAFT

RAMSEY-WASHINGTON
METRO WATERSHED DISTRICT

Ramsey-Washington Metro Watershed District
Minutes of Special Board Workshop Meeting
February 24, 2025

The Regular Meeting of February 24, 2025, was held at the District Office Board Room, 2665 Noel Drive, Little Canada, Minnesota, at 5:00 p.m.

PRESENT:
Val Eisele, President
Ben Karp, Vice President
Mark Gernes, Secretary
Gabi Grogan, Manager
Stephanie Wang, Manager

ABSENT:

ALSO PRESENT:
Staff:
Tina Carstens, District Administrator
Paige Ahlborg, Assistant Administrator

Consultants:
Greg Williams, Barr Engineering

1. CALL TO ORDER
The meeting was called to order by President Eisele at 5:00 p.m. The purpose of this special meeting is for the Board of Managers to discuss the upcoming Watershed Management Plan update and the future goals of the District.

Tina Carstens welcomed newly appointed Manager Grogan to the board. A round of introductions by all attendees followed.

Manager Grogan signed the oath of office.

2. PLAN UPDATE OVERVIEW
Greg Williams provided details of the watershed management plan update process. Greg explained that the process begins with information gathering and engagement, the next step would be to draft a plan development with the final step being formal review, approval and adoption. Greg provided details on the timeline for watershed Management plan update as well as details of the engagement process which includes gathering input from partners and looking for the largest areas of concern within the District, desired actions and partnership opportunities.

3. DISCUSSION OF PRIORITY ISSUES AND RWMWD ROLES
The Board members, Tina Carstens, Paige Ahlborg, and Greg Williams discussed how the District should address gaps and opportunities related to priority issues. The priority issues discussed during the workshop were stormwater management including discussion of chloride reduction and BMP maintenance, flood risk reduction and climate change resiliency, wetlands and wetland restorations, groundwater, shoreland management, resource and project prioritization, and District name recognition. Discussions of the topics included how much focus would be needed for each topic, how other organizations address the topics, what information would be needed to make decisions and how the District's role would evolve over time.

4. ADJOURN
The meeting was adjourned at 7:29pm.

DRAFT

RWMWD BUDGET STATUS REPORT
Administrative & Program Budget
Fiscal Year 2025
2/28/2025

Budget Category	Budget Item	Account Number	Original Budget	Budget Transfers	Current Month Expenses	Year-to-Date Expenses	Current Budget Balance	Percent of Budget
Manager	Per Diems	4355	$7,000.00	-	1,800.00	1,800.00	$7,000.00	25.71%
	Manager Expenses	4360	3,000.00	-	-	-	3,000.00	0.00%
Committees	Committee/Bd Mtg. Exp.	4365	4,000.00	-	394.68	394.68	3,605.32	9.87%
	Sub-Total: Managers/Committees:		**$14,000.00**	**$0.00**	**2,194.68**	**2,194.68**	**$13,605.32**	**15.68%**
Employees	Staff Salary/Taxes/Benefits	4010	2,100,000.00	-	135,457.57	317,699.36	1,782,300.64	15.13%
	Employee Expenses	4020	10,000.00	-	96.92	119.70	9,880.30	1.20%
	District Training & Education	4350	75,000.00	-	947.56	12,181.96	62,818.04	16.24%
	Sub-Total: Employees:		**$2,185,000.00**	**$0.00**	**136,502.05**	**330,001.02**	**$1,854,998.98**	**15.10%**
Administration/ Office	Data Base/GIS Maintenance	4170	25,000.00	-	2,003.18	2,006.54	22,993.46	8.03%
	Telephone	4310	2,000.00	-	232.38	464.76	1,535.24	23.24%
	Office Supplies	4320	7,000.00	-	-	-	7,000.00	0.00%
	Postage/Delivery	4330	2,000.00	-	-	-	2,000.00	0.00%
	Printing/Copying	4335	5,000.00	-	414.10	848.95	4,151.05	16.98%
	Dues & Publications	4338	20,000.00	-	795.00	15,653.00	4,347.00	78.27%
	Janitorial/Trash Service	4341	30,000.00	-	1,109.94	1,466.96	28,533.04	4.89%
	Utilities	4342	20,000.00	-	1,189.35	2,201.35	17,798.65	11.01%
	Building Maintenance	4343	80,000.00	-	3,580.78	5,983.99	74,016.01	7.48%
	Miscellaneous	4390	5,000.00	-	-	-	5,000.00	0.00%
	Insurance	4480	70,000.00	-	-	10,704.67	59,295.33	15.29%
	Office Equipment	4703	50,000.00	-	114.95	114.95	49,885.05	0.23%
	District Vehicles/Maintenance	4810-40	60,000.00	-	4,148.74	4,293.63	55,706.37	7.16%
	Metro INET	4325	110,000.00	-	8,761.78	17,420.18	92,579.82	15.84%
	Sub-Total: Administration/Office:		**$486,000.00**	**-**	**22,350.20**	**61,158.98**	**$424,841.02**	**12.58%**
Consultants/ Outside Services	Auditor/Accounting	4110	80,000.00	-	9,105.50	9,574.15	70,425.85	11.97%
	Engineering-Administration	4121	122,000.00	-	15,196.50	20,542.50	101,457.50	16.84%
	Engineering-Permit I&E	4122	10,000.00	-	-	-	10,000.00	0.00%
	Engineering-Review	4123	80,000.00	-	4,595.50	7,947.50	72,052.50	9.93%
	Engineering-Permit Application Review	4124	70,000.00	-	7,053.50	13,967.50	56,032.50	19.95%
	Project Feasibility Studies	4129	400,000.00	-	3,272.00	5,651.50	394,348.50	1.41%
	Attorney-Permits	4130	5,000.00	-	-	-	5,000.00	0.00%
	Attorney-General	4131	40,000.00	-	-	1,344.00	38,656.00	3.36%
	Outside Consulting Services	4160	40,000.00	-	-	-	40,000.00	0.00%
	Sub-Total: Consultants/Outside Services:		**$847,000.00**	**$0.00**	**39,223.00**	**59,027.15**	**$787,972.85**	**6.97%**
Programs	WMP/Lakes/TMDLs/Grants	4661	378,500.00	-	7,113.29	8,839.79	369,660.21	2.34%
	Natural Resources Program	4670	161,000.00	-	297.58	356.46	160,643.54	0.22%
	Water Monitoring Program	4520-30	513,000.00	-	7,541.21	9,766.38	503,233.62	1.90%
	Outside Program Support	4683	42,000.00	-	-	10,000.00	32,000.00	23.81%
	Research Projects	4695	125,000.00	-	6,775.50	11,158.50	113,841.50	8.93%
	Project Operations	4650	150,000.00	-	2,943.34	5,696.51	144,303.49	3.80%
	Communication/Outreach/Events	4371	166,000.00	-	1,161.88	2,702.51	163,297.49	1.63%
	Health and Safety Program	4697	7,000.00	-	-	-	7,000.00	0.00%
	Sub-Total: Programs:		**$1,542,500.00**	**$0.00**	**25,832.80**	**48,520.15**	**$1,493,979.85**	**3.15%**
GENERAL FUND TOTAL			**$5,074,500.00**	**$0.00**	**226,102.73**	**500,901.98**	**4,575,398.02**	9.87%
CIP's	Project Repair & Maintenance	516	2,180,000.00	-	726,880.40	777,246.02	1,402,753.98	35.65%
	Targeted Retrofit Projects	518	1,185,000.00	-	52,604.00	80,242.60	1,104,757.40	6.77%
	Flood Risk Reduction Fund	520	1,255,000.00	-	22,330.55	34,404.28	1,220,595.72	2.74%
	Debt Services-Beltline/Maplewood Mall	526	410,459.00		-	281,252.55	129,206.45	68.52%
	Stewardship Grant Fund	529	1,250,000.00	-	5,135.00	5,310.00	1,244,690.00	0.42%
	Fish Creek Tributary Improvements	537	1,400,000.00	-	220.50	220.50	1,399,779.50	0.02%
	Wetland Restoration Projects	540	350,000.00	-	12,367.10	12,367.10	337,632.90	3.53%
CIP BUDGET TOTAL			**$8,030,459.00**	**-**	**819,537.55**	**1,191,043.05**	**$6,839,415.95**	14.83%
TOTAL BUDGET			**$13,104,959.00**	**$0.00**	**1,045,640.28**	**1,691,945.03**	**$11,413,013.97**	**12.91%**

Current Fund Balances:

Fund:	Unaudited Beginning Fund Balance @ 12/31/24	Fund Transfers	Year to date Revenue	Current Month Expenses	Year to Date Expense	Unaudited Fund Balance @ 2/28/25
101 - General Fund	$2,725,063.30	-	69,076.51	226,102.73	500,901.98	2,293,237.83
516 - Project Repair & Maintenance	487,840.22	-	15,231.81	726,880.40	777,246.02	(274,173.99)
518 - Targeted Retrofit Projects	207,282.11	-	3,687.83	52,604.00	80,242.60	130,727.34
520 - Flood Risk Reduction Fund	5,408,917.56	-	16,095.57	22,330.55	34,404.28	5,390,608.85
526 - Debt Services-Beltline/Maplewood Mall	281,617.90	-	1,584.88	-	281,252.55	1,950.23
529 - Stewardship Grant Fund	(89,787.37)	-	18,526.39	5,135.00	5,310.00	(76,570.98)
536 - Stormwater Impact Fund	504,106.16	-	46,250.00	-	-	550,356.16
537 - Fish Creek Tributary Improvements	492,497.85	-	118,164.18	138.00	220.50	610,441.53
540 - Wetland Restoration Projects	535,264.57	-	1,293.97	12,367.10	12,367.10	524,191.44
580 - Contingency Fund	1,215,487.00	-	-	-	-	1,215,487.00
Total District Fund Balance	**$11,768,289.30**	**$0.00**	**$ 289,911.14**	**$ 1,045,557.78**	**$1,691,945.03**	**$10,366,255.41**

Ramsey Washington Metro Watershed Dist.

Check Register

For the Period From February 1, 2025 to February 28, 2025

Date	Check #	Payee ID	Payee	Invoice #	Description	Amount
02/03/25	EFT	hea002	HealthPartners	Mar-25	Employee Benefits	$13,083.78
02/01/25	EFT	met008	MetLife-Group Benefits	Feb-25	Employee Benefits	1,753.91
02/21/25	EFT	usb002	U.S. Bank	Febrary 2025 Statement	Various	6,466.31
02/18/25	75265	aws001	AWS Service Center	S1335957-020125	Janitorial/Trash/Plowing/Sweeping	359.94
02/18/25	75266	nar001	Pye Barker	IVN00319938	Building/Site Maintenance	350.00
02/18/25	75267	cen006	Century Power Sports & Equipment	917969	Natural Resources Program	139.98
02/18/25	75268	cen008	CenturyLink	C0073382025029	Stewardship Grant Program/Targeted Retrofit Projects	6,032.31
02/18/25	75269	cit001	City of Little Canada	1/24/2025	Utilities/Building Services Contracts	252.35
02/18/25	75270	cit010	City of White Bear Lake	14132	Data Base/GIS Maintenance	1,257.25
02/18/25	75271	lit002	James Litsheim	22-10 MTN	Stewardship Grant Program	1,000.00
02/18/25	75272	mid003	Roseville Midway Ford	632726	Vehicle Maintenance	1,927.44
02/18/25	75273	mon003	Montana State University	1/9/2025	Natural Resources Program	550.00
02/18/25	75274	nsp001	Xcel Energy	913516589	Building/Site Maintenance	1,137.15
02/18/25	75275	pre003	Premium Waters, Inc.	310603184	Utilities/Building Services Contracts	37.00
02/18/25	75276	red002	Redpath and Company LLC	150493883	Accounting	6,863.00
02/18/25	75277	usb005	US Bank Equipment Finance	548120815	Printing/Copier Lease	414.10
02/18/25	75278	was003	Washington County	228704	Accounting	50.00
02/26/25	75279	ada002	Adam's Pest Control, Inc.	4052943	Building/Site Maintenance	100.40
02/26/25	75280	att002	AT & T Mobility - ROC	287256653401X02252025	Project Operations	163.34
02/26/25	75281	bar001	Barr Engineering	January 18 to February 14, 2025	various	264,918.77
02/26/25	75282	bfg001	BFG Supply Co., LLC	2866102-00	Communications/Outreach/Events	59.00
02/26/25	75283	cad001	Zayo Group, LLC	21291889	Water Monitoring Program	203.37
02/26/25	75284	dim001	Dimke Excavating, Inc.	Progress Payment #1	Construction Imp.-Wetland Restoration Projects	55,619.65
02/26/25	75285	eis001	Val Eisele	2024	Manager Expenses	192.96
02/26/25	75286	fit001	Fitzgerald Excavating & Trucking, Inc.	Pay App # 1	Construction Improvements/Project Maint & Repair	349,886.90
02/26/25	75287	fit002	Mary Fitzgerald	45713	Employee Expenses	494.61
02/26/25	75288	fit003	Emily F. Kamin	102	Utilities/Building Services Contracts	525.00
02/26/25	75289	gal001	Galowitz Olson, PLLC	February 20, 2025	Accounting	2,035.00
02/26/25	75290	int001	Office of MN, IT Services	W25010531	Telephone	59.38
02/26/25	75291	mel001	Michelle L. Melser	Feb 2025	Employee Expenses	84.34
02/26/25	75292	met012	Metro-INET	2456	Telephone	9,361.00
02/26/25	75293	mid003	Roseville Midway Ford	632726	Vehicle Maintenance	1,927.44
02/26/25	75294	min007	Minger Construction Co., Inc.	Progress Payment #3	Construction Improvements/Project Maint & Repair	305,401.25
02/26/25	75295	ncp001	NCPERS Group Life Ins.	February 1, 2025	Employee Benefits	16.00
02/26/25	75296	nsp001	Xcel Energy	914129227	Building/Site Maintenance	1,747.12
02/26/25	75297	pac001	Pace Analytical Services, Inc.	25100475825; 25100476831	Water Monitoring Program	2,385.00
02/26/25	75298	ram016	Ramsey County	ram002	Research Projects	29,140.00
02/26/25	75299	red005	Redeemer Lutheran Church	24-56 CS	Stewardship Grant Program	90,500.00
02/26/25	75300	ret001	The Retrofit Companies, Inc.	0128276-IN	Janitorial/Trash Plowing/Sweeping	750.00
02/26/25	75301	roc001	Rock Leaf Water Environmental LLC	3338	Construction Improvements/Project Maint & Repair	387.18
02/26/25	75302	sai001	Saint Paul Media	03/01/2025	Communications/Outreach/Events	100.00
02/26/25	75303	sel001	Tim Melser	1526	Building/Site Maintenance	712.50
02/26/25	75304	til002	Joseph S. Tillotson	Feb-25	Employee Expenses	55.69
02/26/25	75305	uli001	Uline	31959573	Natural Resources Program	97.12
02/26/25	75306	vik001	Viking Industrial Center	3304079	Water Monitoring Program	129.00
02/26/25	75307	vin001	Vineland Tree Care	37642	Construction Improvements/Project Maint & Repair	1,210.00
02/26/25	75308	voy001	US Bank Voyager Fleet Sys.	8692934232509	Vehicle Fuel	293.86
02/26/25	75309	was002	Washington Conservation District	6891	Stewardship Grant Program	3,103.50
02/26/25	75310	wil007	Patrick D. Williamson	Feb-25	Employee Benefits	104.00
	Total					**$1,163,437.90**

02/14/25	EFT	myp001	February 14th Payroll	02/14/25	4110-101-000	77.65
02/28/25	EFT	myp001	February 28th Payroll	02/28/25	4110-101-000	79.85
02/14/25	Dir.Dep.	---	February 14th Payroll	Payroll Expense-Net	4010-101-000	31,652.06
02/14/25	EFT	int002	February 14th Federal Withholding	Internal Rev.Serv.	2001-101-000	11,623.13
02/14/25	EFT	mnd001	February 14th State Withholding	MN Revenue	2003-101-000	1,958.67
02/14/25	EFT	per001	February 14th PERA	PERA	2011-101-000	6,943.62
02/14/25	EFT	emp002	Employee Def. Comp. Contributions	Empower Retirement	2016-101-000	1,843.00
02/14/25	EFT	emp002	Employee IRA Contributions	Empower Retirement	2018-101-000	2,149.00
02/28/25	Dir.Dep.	---	February 28th Payroll	Payroll Expense-Net	4010-101-000	33,201.10
02/28/25	EFT	int002	February 28th Federal Withholding	Internal Rev.Serv.	2001-101-000	11,976.99
02/28/25	EFT	mnd001	February 28th State Withholding	MN Revenue	2003-101-000	1,993.45
02/28/25	EFT	per001	February 28th PERA	PERA	2011-101-000	6,943.62
02/28/25	EFT	emp002	Employee Def. Comp. Contributions	Empower Retirement	2016-101-000	1,843.00
02/28/25	EFT	emp002	Employee IRA Contributions	Empower Retirement	2018-101-000	2,149.00
					Payroll/Benefits:	**$114,434.14**
	Total				**Accounts Payable/Payroll/Benefits:**	**$1,277,872.04**

Ramsey Washington Metro Watershed Dist.

Cash Disbursements Journal

For the Period From February 1, 2025 to February 28, 2025

Date	Check #	Vendor ID	Name	Account ID	Description	Amount
02/03/25	EFT	hea002	HealthPartners	4040-101-000	Employee Benefits	$13,083.78
02/01/25	EFT	met008	MetLife-Group Benefits	4040-101-000	Employee Benefits	1,753.91
02/21/25	EFT	usb002	U.S. Bank			6,466.31
				4320-101-000	Office Supplies	40.78
				4320-101-000	Office Supplies	20.69
				4325-101-000	Roseville IT Services/Web Site/Software/Licenses	95.78
				4040-101-000	Employee Benefits	(28.93)
				4170-101-000	Data Base/GIS Maintenance	168.00
				4040-101-000	Employee Benefits	131.24
				4371-101-000	Communications/Outreach/Events	153.00
				4371-101-000	Communications/Outreach/Events	50.00
				4371-101-000	Communications/Outreach/Events	99.00
				4371-101-000	Communications/Outreach/Events	100.00
				4338-101-000	Dues & Publications	85.00
				4371-101-000	Communications/Outreach/Events	279.00
				4040-101-000	Employee Benefits	69.90
				4040-101-000	Employee Benefits	167.50
				4040-101-000	Employee Benefits	577.40
				4343-101-000	Building and Site Maintenance	16.23
				4320-101-000	Office Supplies	44.50
				4320-101-000	Office Supplies	309.08
				4365-101-000	Committee/Board Meeting Expenses	100.00
				4343-101-000	Building and Site Maintenance	144.07
				4320-101-000	Office Supplies	48.10
				4703-101-000	Equipment	114.95
				4320-101-000	Office Supplies	28.73
				4040-101-000	Employee Benefits	446.50
				4371-101-000	Communications/Outreach/Events	42.58
				4371-101-000	Communications/Outreach/Events	40.00
				4350-101-000	Training & Education	320.04
				4350-101-000	Training & Education	320.04
				4040-101-000	Employee Benefits	446.82
				4371-101-000	Communications/Outreach/Events	100.00
				4320-101-000	Office Supplies	59.74
				4371-101-000	Communications/Outreach/Events	20.42
				4338-101-000	Dues & Publications	20.00
				4320-101-000	Office Supplies	13.99
				4350-101-000	Training & Education	150.00
				4371-101-000	Communications/Outreach/Events	45.00
				4670-101-000	Natural Resources Program	54.49
				4338-101-000	Dues & Publications	390.00
				4371-101-000	Communications/Outreach/Events	60.00
				4338-101-000	Dues & Publications	300.00
				4661-101-000	WMP/Lakes/TMDLs/Grants	431.79
				4365-101-000	Committee/Board Meeting Expenses	149.80
				4365-101-000	Committee/Board Meeting Expenses	91.15

Date	Check #	Vendor ID	Name	Account ID	Description	Amount	
				4365-101-000	Committee/Board Meeting Expenses		53.73
				4350-101-000	Training & Education		70.00
				4320-101-000	Office Supplies		8.96
				4371-101-000	Communications/Outreach/Events		13.88
				4170-101-000	Data Base/GIS Maintenance		3.36
02/18/25	75265	aws001	AWS Service Center	4341-101-000	Janitorial/Trash/Plowing/Sweeping	359.94	
02/18/25	75266	nar001	Pye Barker	4343-101-000	Building/Site Maintenance	350.00	
02/18/25	75267	cen006	Century Power Sports & Equipment	4670-101-000	Natural Resources Program	139.98	
02/18/25	75268	cen008	CenturyLink	4682-518-000	Stewardship Grant Program/Targeted Retrofit Projects	6,032.31	
02/18/25	75269	cit001	City of Little Canada	4342-101-000	Utilities/Building Services Contracts	252.35	
02/18/25	75270	cit010	City of White Bear Lake	4170-101-000	Data Base/GIS Maintenance	1,257.25	
02/18/25	75271	lit002	James Litsheim	4682-529-000	Stewardship Grant Program	1,000.00	
02/18/25	75272	mid003	Roseville Midway Ford	4820-101-000	Vehicle Maintenance	1,927.44	
02/18/25	75273	mon003	Montana State University	4670-101-000	Natural Resources Program	550.00	
02/18/25	75274	nsp001	Xcel Energy			1,137.15	
				4343-101-000	Building/Site Maintenance		460.46
				4530-101-000	Water Monitoring Program		464.84
				4650-520-000	Project Operations/Flood Damage Reduction Fund		211.85
02/18/25	75275	pre003	Premium Waters, Inc.	4342-101-000	Utilities/Building Services Contracts	37.00	
02/18/25	75276	red002	Redpath and Company LLC	4110-101-000	Accounting	6,863.00	
02/18/25	75277	usb005	US Bank Equipment Finance	4335-101-000	Printing/Copier Lease	414.10	
02/18/25	75278	was003	Washington County	4110-101-000	Accounting	50.00	
02/26/25	75279	ada002	Adam's Pest Control, Inc.	4343-101-000	Building/Site Maintenance	100.40	
02/26/25	75280	att002	AT & T Mobility - ROC	4650-101-000	Project Operations	163.34	
02/26/25	75281	bar001	Barr Engineering			264,918.77	
				4121-101-000	Engineering Admin		15,196.50
				4123-101-000	Engineering Review		4,595.50
				4129-101-000	Project Feasability		303.00
				4129-101-000	Project Feasability		1,167.00
				4129-101-000	Project Feasability		1,802.00
				4520-101-000	WQM-Engineering		1,314.50
				4520-101-000	WQM-Engineering		2,791.00
				4520-101-000	WQM-Engineering		253.50
				4124-101-000	Eng. Permit Review		7,053.50
				4661-101-000	SLMP/TMDL Studies		6,615.50
				4661-101-000	SLMP/TMDL Studies		66.00
				4695-101-000	Research Projects		5,331.00
				4695-101-000	Research Projects		1,444.50
				4650-101-000	Project Operations		144.00
				4650-101-000	Project Operations		59.00
				4650-101-000	Project Operations		2,262.00
				4650-101-000	Project Operations		315.00
				4128-518-000	Engineering -Targeted Retrofit		24,754.50
				4128-518-000	Engineering -Targeted Retrofit		21,861.00
				4682-529-000	Stewardship Grant Program		2,031.50
				4128-518-000	Engineering -Targeted Retrofit		88.50

Date	Check #	Vendor ID	Name	Account ID	Description	Amount	
				4129-537-000	Driveway Fish Creek Tributary		138.00
				4128-518-000	Engineering -Targeted Retrofit		1,619.00
				4128-540-000	Eng. Projects-Wetlands		0.00
				4128-520-000	Engineering -Flood Damage		910.50
				4128-520-000	Engineering -Flood Damage		15,701.20
				4128-520-000	Engineering -Flood Damage		5,507.00
				4128-518-000	Engineering -Targeted Retrofit		4,060.00
				4128-518-000	Engineering -Targeted Retrofit		221.00
				4128-516-000	Eng. Projects-Maint & Repair		4,075.88
				4128-516-000	Eng. Projects-Maint & Repair		8,597.76
				4128-516-000	Eng. Projects-Maint & Repair		43,628.76
				4128-516-000	Eng. Projects-Maint & Repair		81,010.67
02/26/25	75282	bfg001	BFG Supply Co., LLC	4371-101-000	Communications/Outreach/Events	59.00	
02/26/25	75283	cad001	Zayo Group, LLC	4530-101-000	Water Monitoring Program	203.37	
02/26/25	75284	dim001	Dimke Excavating, Inc.			55,619.65	
				4630-540-000	Construction Improvements-Wetland Restoration Projects		43,252.55
				4630-540-000	Construction Improvements-Wetland Restoration Projects		12,367.10
02/26/25	75285	eis001	Val Eisele	4360-101-000	Manager Expenses	192.96	
02/26/25	75286	fit001	Fitzgerald Excavating & Trucking, Inc.			349,886.90	
				4630-516-000	Construction Improvements/Project Maintenance & Repair		67,318.00
				4630-516-000	Construction Improvements/Project Maintenance & Repair		282,568.90
02/26/25	75287	fit002	Mary Fitzgerald			494.61	
				4020-101-000	Employee Expenses		12.88
				4040-101-000	Employee Benefits		19.25
				4350-101-000	Training & Education		87.48
				4342-101-000	Utilities/Building Services Contracts		375.00
02/26/25	75288	fit003	Emily F. Kamin	4342-101-000	Utilities/Building Services Contracts	525.00	
02/26/25	75289	gal001	Galowitz Olson, PLLC	4110-101-000	Accounting	2,035.00	
02/26/25	75290	int001	Office of MN, IT Services	4310-101-000	Telephone	59.38	
02/26/25	75291	mel001	Michelle L. Melser			84.34	
				4020-101-000	Employee Expenses		34.34
				4343-101-000	Building/Site Maintenance		50.00
02/26/25	75292	met012	Metro-INET			9,361.00	
				4325-101-000	Roseville IT Services/Web Site/Software/Licenses		8,666.00
				4310-101-000	Telephone		173.00
				4325-101-000	Roseville IT Services/Web Site/Software/Licenses		522.00
02/26/25	75293	mid003	Roseville Midway Ford	4820-101-000	Vehicle Maintenance	1,927.44	
02/26/25	75294	min007	Minger Construction Co., Inc.	4630-516-000	Construction Improvements/Project Maintenance & Repair	305,401.25	
02/26/25	75295	ncp001	NCPERS Group Life Ins.	4040-101-000	Employee Benefits	16.00	
02/26/25	75296	nsp001	Xcel Energy	4343-101-000	Building/Site Maintenance	1,747.12	
02/26/25	75297	pac001	Pace Analytical Services, Inc.	4530-101-000	Water Monitoring Program	2,385.00	

Ramsey Washington Metro Watershed Dist.

Cash Disbursements Journal

For the Period From February 1, 2025 to February 28, 2025

Date	Check #	Vendor ID	Name	Account ID	Description	Amount	
02/26/25	75298	ram016	Ramsey County			29,140.00	
				4695-101-000	Research Projects		18,320.00
				4670-101-000	Natural Resources Program		10,820.00
02/26/25	75299	red005	Redeemer Lutheran Church	4682-529-000	Stewardship Grant Program	90,500.00	
02/26/25	75300	ret001	The Retrofit Companies, Inc.	4341-101-000	Janitorial/Trash Plowing/Sweeping	750.00	
02/26/25	75301	roc001	Rock Leaf Water Environmental LLC	4630-516-000	Construction Improvements/Project Maintenance & Repair	387.18	
02/26/25	75302	sai001	Saint Paul Media	4371-101-000	Communications/Outreach/Events	100.00	
02/26/25	75303	sel001	Tim Melser	4343-101-000	Building/Site Maintenance	712.50	
02/26/25	75304	til002	Joseph S. Tillotson			55.69	
				4670-101-000	Natural Resources Program		5.99
				4020-101-000	Employee Expenses		49.70
02/26/25	75305	uli001	Uline	4670-101-000	Natural Resources Program	97.12	
02/26/25	75306	vik001	Viking Industrial Center	4530-101-000	Water Monitoring Program	129.00	
02/26/25	75307	vin001	Vineland Tree Care	4630-516-000	Construction Improvements/Project Maintenance & Repair	1,210.00	
02/26/25	75308	voy001	US Bank Voyager Fleet Sys.	4830-101-000	Vehicle Fuel	293.86	
02/26/25	75309	was002	Washington Conservation District	4682-529-000	Stewardship Grant Program	3,103.50	
02/26/25	75310	wil007	Patrick D. Williamson	4040-101-000	Employee Benefits	104.00	
	Total					**$1,163,437.90**	
02/14/25	EFT	myp001	February 14th Payroll	4110-101-000	February 14th Payroll	77.65	
02/28/25	EFT	myp001	February 28th Payroll	4110-101-000	February 28th Payroll	79.85	
02/14/25	Dir.Dep.	---	February 14th Payroll	4010-101-000	February 14th Payroll	31,652.06	
02/14/25	EFT	int002	February 14th Federal Withholding	2001-101-000	February 14th Federal Withholding	11,623.13	
02/14/25	EFT	mnd001	February 14th State Withholding	2003-101-000	February 14th State Withholding	1,958.67	
02/14/25	EFT	per001	February 14th PERA	2011-101-000	February 14th PERA	6,943.62	
02/14/25	EFT	emp002	Employee Def. Comp. Contributions	2016-101-000	Employee Def. Comp. Contributions	1,843.00	
02/14/25	EFT	emp002	Employee IRA Contributions	2018-101-000	Employee IRA Contributions	2,149.00	
02/28/25	Dir.Dep.	---	February 28th Payroll	4010-101-000	February 28th Payroll	33,201.10	
02/28/25	EFT	int002	February 28th Federal Withholding	2001-101-000	February 28th Federal Withholding	11,976.99	
02/28/25	EFT	mnd001	February 28th State Withholding	2003-101-000	February 28th State Withholding	1,993.45	
02/28/25	EFT	per001	February 28th PERA	2011-101-000	February 28th PERA	6,943.62	
02/28/25	EFT	emp002	Employee Def. Comp. Contributions	2016-101-000	Employee Def. Comp. Contributions	1,843.00	
02/28/25	EFT	emp002	Employee IRA Contributions	2018-101-000	Employee IRA Contributions	2,149.00	
					Payroll/Benefits:	**$114,434.14**	
	Total				**Accounts Payable/Payroll/Benefits:**	**$1,277,872.04**	

BARR

Summary of Professional Engineering Services During the Period
January 18 through February 14, 2025

	Total Engineering Budget (2025)	Total Fees to Date (2025)	Budget Balance (2025)	Fees During Period	District Accounting Code	Plan Implementation Task Number
Engineering Administration						
General Engineering Administration	$96,600.00	$20,542.50	$76,057.50	$15,196.50	**4121-101**	DW-13
RWMWD Health and Safety/ERTK Program (Training)	$2,000.00	$0.00	$2,000.00	$0.00	**4697-101**	DW-13
Education Assistance	$20,000.00	$0.00	$20,000.00	$0.00	**4129-101**	DW-11, DW-13
Targeted Retrofit Outreach, Assessment and Planning	$25,000.00	$0.00	$25,000.00	$0.00	**4121-101**	DW-6, DW-13, DW-20
Engineering Review						
Engineering Review	$78,750.00	$7,947.50	$70,802.50	$4,595.50	**4123-101**	DW-13
Project Feasibility Studies						
Manufactured Homes Resilience Evaluation	$20,000.00	$402.00	$19,598.00	$303.00	**4129-101**	GC-3
Phalen Village Improvements	$5,000.00	$0.00	$5,000.00	$0.00	**4129-101**	DW-9
Evaluate compliance with South Metro Mississippi River TSS TMDL	$25,000.00	$0.00	$25,000.00	$0.00	**4129-101**	MR-2
Street Sweeping	$20,000.00	$3,249.50	$16,750.50	$1,167.00	**4129-101**	DW-6, DW-15
Tanners, Battle Creek Lake, McKnight Basin outlet operation plan	$35,000.00	$0.00	$35,000.00	$0.00	**4129-101**	DW-9
Interim Emergency Response Plans (Non-Beltline Areas)	$30,000.00	$0.00	$30,000.00	$0.00	**4129-101**	DW-19
Flood Risk Reduction feasibility study - 4th street North and 4th Street Place N (N of ABI)	$75,000.00	$0.00	$75,000.00	$0.00	**4129-101**	DW-9
Flood Risk Reduction feasibility study - Roseville Central Park	$50,000.00	$2,000.00	$48,000.00	$1,802.00	**4129-101**	DW-9
Stormwater Model Updates	$50,000.00	$0.00	$50,000.00	$0.00	**4129-101**	DW-9
Studies Stemming From Creek Walks	$30,000.00	$0.00	$30,000.00	$0.00	**4129-101**	DW-1
Shoreline Assessment Assistance	$20,000.00	$0.00	$20,000.00	$0.00	**4129-101**	DW-8
Wetland Restoration Planning	$20,000.00	$0.00	$20,000.00	$0.00	**4129-101**	DW-8
Contingency*	$20,000.00	$0.00	$20,000.00	$0.00	**4129-101**	
GIS Maintenance						
GIS Maintenance	$5,000.00	$0.00	$5,000.00	$0.00	**4170-101**	DW-13
Monitoring Water Quality/Project Monitoring						
Lake Water Quality Monitoring (Misc QA/QC)	$10,000.00	$0.00	$10,000.00	$0.00	**4520-101**	DW-2
Annual WQ Report Assistance	$20,000.00	$1,314.50	$18,685.50	$1,314.50	**4520-101**	DW-2
Special Project BMP Monitoring	$30,000.00	$2,791.00	$27,209.00	$2,791.00	**4520-101**	DW-12
Grass Lake Berm Wetland Monitoring	$5,000.00	$451.50	$4,548.50	$253.50	**4520-101**	DW-5, DW-8
Battle Creek and Fish Creek Monitoring	$20,000.00	$390.00	$19,610.00	$0.00	**4520-101**	DW-1, DW-2
Permit Processing, Inspection and Enforcement						
Permit Application Inspection and Enforcement	$10,000.00	$0.00	$10,000.00	$0.00	**4122-101**	DW-7
Permit Application Review	$70,000.00	$13,967.50	$56,032.50	$7,053.50	**4124-101**	DW-7
Watershed Management Plan Update						
Ecosystem Restoration Plan (or "Ecosystem Health Action Plan") Placeholder	$50,000.00	$0.00	$50,000.00	$0.00	**4661-101**	DW-8, DW-14
WMP Update Phase 1- Stakeholder Engagement	$47,000.00	$11,501.00	$35,499.00	$6,615.50	**4661-101**	DW-13
WMP Update Phase 2- Complex Pre-Work	$30,000.00	$0.00	$30,000.00	$0.00	**4661-101**	DW-13
WMP Update Phase 3- Draft Plan Development	$37,000.00	$0.00	$37,000.00	$0.00	**4661-101**	DW-13
Lake Studies/TMDL Reports						
2025 Grant Applications	$20,000.00	$66.00	$19,934.00	$66.00	**4661-101**	DW-13
Contingency for Lake Studies	$22,500.00	$0.00	$22,500.00	$0.00	**4661-101**	
Research Projects						
New Technology Mini Case Studies (average 6 per year)	$15,750.00	$9,714.00	$6,036.00	$5,331.00	**4695-101**	DW-12
Wakefield Lake Aeration Feasibility Study	$50,000.00	$1,444.50	$48,555.50	$1,444.50	**4695-101**	
Project Operations						
2025 Tanners Alum Facility Monitoring	$17,850.00	$144.00	$17,706.00	$144.00	**4650-101**	TaL-3
Phalen/Keller and Twin Operations Support & Communications	$5,000.00	$59.00	$4,941.00	$59.00	**4650-101**	DW-5, DW-13, DW-18
Lake Level Station Operation and Maintenance	$50,000.00	$4,843.50	$45,156.50	$2,262.00	**4650-101**	DW-5, DW-18
Lake Level Station Forecast Integration	$55,000.00	$315.00	$54,685.00	$315.00	**4650-101**	DW-5, DW-18
Capital Improvements						
Roosevelt Homes Phase III	$22,000.00	$33,912.00	-$11,912.00	$24,754.50	**4128-518**	DW-6, DW-9
Targeted Retrofit Projects 2025	$150,000.00	$34,959.50	$115,040.50	$21,861.00	**4128-518**	DW-6
Stewardship Grant Program	$75,000.00	$2,206.50	$72,793.50	$2,031.50	**4682-529**	DW-6
Pioneer Park Stormwater Reuse*	$10,000.00	$178.50	$9,821.50	$88.50	**4128-518**	DW-6
Double Driveway and Fish Creek Tributary Improvements	$235,000.00	$220.50	$234,779.50	$138.00	**4129-537**	FC-2
Cottage Place Wetland*	$30,000.00	$2,815.10	$27,184.90	$1,619.00	**4128-518**	DW-8, DW-14, LE-3
Ames Lake improvements	$250,000.00	$0.00	$250,000.00	$0.00	**4128-520**	DW-9, BELT-1
County Road C Culvert Capacity*	$10,000.00	$1,372.50	$8,627.50	$910.50	**4128-520**	DW-9, KC-2
Kohlman Creek Improvements*	$90,000.00	$23,530.90	$66,469.10	$15,701.20	**4128-520**	DW-9, KC-2
Wabasso Outlet Replacement	$60,000.00	$12,783.84	$47,216.16	$5,507.00	**4128-520**	DW-5
Kohlman Lake Alum Treatment*	$71,300.00	$8,156.50	$63,143.50	$4,060.00	**4128-518**	KL-2
Woodbury Target*	$10,000.00	$221.00	$9,779.00	$221.00	**4128-518**	DW-6
CIP Project Repair & Maintenance						
Routine CIP Inspection and Unplanned Maintenance Identification	$125,000.00	$4,810.88	$120,189.12	$4,075.88	**4128-516**	DW-5
2025 CIP Maintenance and Repairs	$270,360.00	$54,047.16	$216,312.84	$8,597.76	**4128-516**	DW-5
Beltline long-term fix near river outfall	$320,000.00	$260,139.78	$59,860.22	$43,628.76	**4128-516**	BELT-2
Beltline 5-year inspection	$165,000.00	$128,646.94	$36,353.06	$81,010.67	**4128-516**	BELT-2
Survey of Beltline and Battle Creek Tunnels (alignment and vertical profiles)	$70,000.00	$0.00	$70,000.00	$0.00	**4128-516**	BELT-2

***For these CIP projects, only the 2025 portion of the total budget is shown.**

Barr declares under the penalties of Law that this Account, Claim, or Demand is just and that no part has been paid.

$264,918.77



Bradley J. Lindaman, Vice President

2025 Capital Improvement Project (CIP) Progress Payment Number 1

1.0	Total Completed Through This Period:	$368,302.00		
2.0	Total Completed Previously Completed:		$0.00	
3.0	Total Completed This Period:			$368,302.00
4.0	Amount Previously Retained:		$0.00	
5.0	Amount Retained This Period:			$18,415.10
6.0	Total Amount Retained:		$18,415.10	
7.0	Retainage Released Through This Period:			$0.00
8.0	Total Retainage Remaining:		$18,415.10	
9.0	Amounts Previously Paid:	$0.00		
10.0	Amount Due This Estimate:			$349,886.90

Retainage shall be 5 percent of the value of the Work completed.

SUBMITTED BY:

Name: Jason Fitzgerald Date: 2-20-2025

Title: President

Contractor: Fitzgerald Excavating Inc.

Signature:

RECOMMENDED BY:

Name: Brad Lindaman Date: 2025.02.20

Title: Project Engineer

Engineer: Barr Engineering Company

Signature:

APPROVED BY:

Name: Val Eisele Date:

Title: President

Owner: Ramsey-Washington Metro Watershed District

Signature:

2025 Capital Improvement Project (CIP)
Ramsey-Washington Metro Watershed District
Summary of Work Completed Through February 18th, 2025 for Progress Payment Number 1

						(1) Total Completed Through This Period		(2) Total Completed Previous Period		(3) Total Completed This Period	
Item	Description	Unit	Estimated Quantity	Unit Price	Extension	Quantity	Amount	Quantity	Amount	Quantity	Amount
General											
A	Mobilization/Demobilization	L.S.	1	$205,000.00	$205,000.00	0.5	$102,500.00	0.0	$0.00	0.5	$102,500.00
B	Control of Water	L.S.	1	$25,000.00	$25,000.00	0.5	$12,500.00	0.0	$0.00	0.5	$12,500.00
C	Traffic Control	L.S.	1	$25,000.00	$25,000.00	0.5	$12,500.00	0.0	$0.00	0.5	$12,500.00
Site 1 - Tamarack Swamp, Woodbury (PFS Basins Cleaning/Sweeping)											
D	Sediment/Muck Cleanout Excavation, Loading, Hauling and Offsite Delivery of Unregulated Material (SRV Level 1)	Ton	92	$20.00	$1,840.00	0	$0.00	0	$0.00	0	$0.00
E	Disposal Only Fee for Regulated Material (SRV Level 2 and 3)	Ton	92	$13.00	$1,196.00	0	$0.00	0	$0.00	0	$0.00
F	Site Restoration (Seeding and Erosion Control Blanket)	S.Y.	100	$4.00	$400.00	0	$0.00	0	$0.00	0	$0.00
G	Sediment Log (9-Inch Diameter)	L.F.	60	$3.00	$180.00	0	$0.00	0	$0.00	0	$0.00
H	Paver Sweeping	S.Y.	1,400	$10.00	$14,000.00	0	$0.00	0	$0.00	0	$0.00
Site 2 - Lower Afton Road, Maplewood (Drainageway Sediment Removal)											
D	Sediment/Muck Cleanout Excavation, Loading, Hauling and Offsite Delivery of Unregulated Material (SRV Level 1)	Ton	127	$20.00	$2,540.00	0	$0.00	0	$0.00	0	$0.00
E	Disposal Only Fee for Regulated Material (SRV Level 2 and 3)	Ton	127	$13.00	$1,651.00	0	$0.00	0	$0.00	0	$0.00
F	Site Restoration (Seeding and Erosion Control Blanket)	S.Y.	200	$1.00	$200.00	0	$0.00	0	$0.00	0	$0.00
I	Composite Mud Mats	S.Y.	45	$15.00	$675.00	0	$0.00	0	$0.00	0	$0.00
Site 3 - Roseville Middle School Splash Block Repair											
J	Repair Existing Splashblock Assembly	S.F.	25	$200.00	$5,000.00	0	$0.00	0	$0.00	0	$0.00
Site 4 - Gervais Creek Maintenance											
D	Sediment/Muck Cleanout Excavation, Loading, Hauling and Offsite Delivery of Unregulated Material (SRV Level 1)	Ton	480	$20.00	$9,600.00	358	$7,160.00	0	$0.00	358	$7,160.00
E	Disposal Only Fee for Regulated Material (SRV Level 2 and 3)	Ton	480	$13.00	$6,240.00	0	$0.00	0	$0.00	0	$0.00
F	Site Restoration (Seeding and Erosion Control Blanket)	S.Y.	800	$4.00	$3,200.00	499	$1,996.00	0	$0.00	499	$1,996.00
K	Remove and Dispose of Existing 1 ½" to 2" Filter Rock	L.S.	1	$25,000.00	$25,000.00	1	$25,000.00	0	$0.00	1	$25,000.00
L	Clear Washed Filter Rock	Ton	50	$75.00	$3,750.00	53	$3,975.00	0	$0.00	53	$3,975.00
M	Flotation Silt Curtain	L.F.	45	$25.00	$1,125.00	45	$1,125.00	0	$0.00	45	$1,125.00
I	Composite Mud Mats	S.Y.	100	$15.00	$1,500.00	0	$0.00	0	$0.00	0	$0.00
G	Sediment Log (9-Inch Diameter)	L.F.	40	$4.00	$160.00	272	$1,088.00	0	$0.00	272	$1,088.00
~~P~~	~~Inlet Protection~~	~~Each~~	~~2~~	~~$250.00~~	~~$500.00~~	~~0~~	~~$0.00~~	~~0~~	~~$0.00~~	~~0~~	~~$0.00~~
Site 5 - McKnight Basin Pond Maintenance											
N	Construction Entrance	Each	1	$3,000.00	$3,000.00	0	$0.00	0	$0.00	0	$0.00
D	Sediment/Muck Cleanout Excavation, Loading, Hauling and Offsite Delivery of Unregulated Material (SRV Level 1)	Ton	7,853	$20.00	$157,060.00	0	$0.00	0	$0.00	0	$0.00
E	Disposal Only Fee for Regulated Material (SRV Level 2 and 3)	Ton	7,853	$13.00	$102,089.00	0	$0.00	0	$0.00	0	$0.00
F	Site Restoration (Seeding and Erosion Control Blanket)	S.Y.	1,000	$4.00	$4,000.00	0	$0.00	0	$0.00	0	$0.00
G	Sediment Log (9-Inch Diameter)	L.F.	200	$4.00	$800.00	0	$0.00	0	$0.00	0	$0.00
I	Composite Mud Mats	S.Y.	30	$15.00	$450.00	0	$0.00	0	$0.00	0	$0.00
P	Inlet Protection	Each	2	$250.00	$500.00	0	$0.00	0	$0.00	0	$0.00

2025 Capital Improvement Project (CIP)
Ramsey-Washington Metro Watershed District
Summary of Work Completed Through February 18th, 2025 for Progress Payment Number 1

						(1) Total Completed Through This Period		(2) Total Completed Previous Period		(3) Total Completed This Period	
Item	Description	Unit	Estimated Quantity	Unit Price	Extension	Quantity	Amount	Quantity	Amount	Quantity	Amount
Site 6 - Maple Hills. Pond Maintenance											
N	Construction Entrance	Each	1	$3,000.00	$3,000.00	0	$0.00	0	$0.00	0	$0.00
D	Sediment/Muck Cleanout Excavation, Loading, Hauling and Offsite Delivery of Unregulated Material (SRV Level 1)	Ton	1,074	$20.00	$21,480.00	0	$0.00	0	$0.00	0	$0.00
E	Disposal Only Fee for Regulated Material (SRV Level 2 and 3)	Ton	1,074	$13.00	$13,962.00	0	$0.00	0	$0.00	0	$0.00
F	Site Restoration (Seeding and Erosion Control Blanket)	S.Y.	500	$4.00	$2,000.00	0	$0.00	0	$0.00	0	$0.00
M	Flotation Silt Curtain	L.F.	175	$25.00	$4,375.00	0	$0.00	0	$0.00	0	$0.00
G	Sediment Log (9-Inch Diameter)	L.F.	40	$4.00	$160.00	0	$0.00	0	$0.00	0	$0.00
O	MN/DOT Class III Riprap (Field Stone) with Geotextile Filter Fabric	Ton	20	$120.00	$2,400.00	0	$0.00	0	$0.00	0	$0.00
Site 7 - Pond 9 Maintenance											
N	Construction Entrance	Each	1	$1,000.00	$1,000.00	1	$1,000.00	0	$0.00	1	$1,000.00
D	Sediment/Muck Cleanout Excavation, Loading, Hauling and Offsite Delivery of Unregulated Material (SRV Level 1)	Ton	1,470	$20.00	$29,400.00	1,218	$24,360.00	0	$0.00	1,218	$24,360.00
E	Disposal Only Fee for Regulated Material (SRV Level 2 and 3)	Ton	1,470	$13.00	$19,110.00	0	$0.00	0	$0.00	0	$0.00
F	Site Restoration (Seeding and Erosion Control Blanket)	S.Y.	200	$4.00	$800.00	150	$600.00	0	$0.00	150	$600.00
G	Sediment Log (9-Inch Diameter)	L.F.	60	$4.00	$240.00	0	$0.00	0	$0.00	0	$0.00
O	MN/DOT Class III Riprap (Field Stone) with Geotextile Filter Fabric	Ton	10	$120.00	$1,200.00	10	$1,200.00	0	$0.00	10	$1,200.00
P	Inlet Protection	Each	2	$250.00	$500.00	2	$500.00	0	$0.00	2	$500.00
Site 8 - Maple Leaf Pond Maintenance											
D	Sediment/Muck Cleanout Excavation, Loading, Hauling and Offsite Delivery of Unregulated Material (SRV Level 1)	Ton	342	$20.00	$6,840.00	0	$0.00	0	$0.00	0	$0.00
E	Disposal Only Fee for Regulated Material (SRV Level 2 and 3)	Ton	342	$13.00	$4,446.00	0	$0.00	0	$0.00	0	$0.00
F	Site Restoration (Seeding and Erosion Control Blanket)	S.Y.	100	$4.00	$400.00	0	$0.00	0	$0.00	0	$0.00
G	Sediment Log (9-Inch Diameter)	L.F.	40	$4.00	$160.00	0	$0.00	0	$0.00	0	$0.00
I	Composite Mud Mats	S.Y.	130	$15.00	$1,950.00	0	$0.00	0	$0.00	0	$0.00
O	MN/DOT Class III Riprap (Field Stone) with Geotextile Filter Fabric	Ton	10	$120.00	$1,200.00	0	$0.00	0	$0.00	0	$0.00
P	Inlet Protection	Each	2	$250.00	$500.00	0	$0.00	0	$0.00	0	$0.00
Site 9 - Harbor Place Pond Maintenance											
N	Construction Entrance	Each	1	$1,000.00	$1,000.00	1	$1,000.00	0	$0.00	1	$1,000.00
D	Sediment/Muck Cleanout Excavation, Loading, Hauling and Offsite Delivery of Unregulated Material (SRV Level 1)	Ton	45	$20.00	$900.00	40	$800.00	0	$0.00	40	$800.00
E	Disposal Only Fee for Regulated Material (SRV Level 2 and 3)	Ton	45	$13.00	$585.00	40	$520.00	0	$0.00	40	$520.00
F	Site Restoration (Seeding and Erosion Control Blanket)	S.Y.	150	$4.00	$600.00	0	$0.00	0	$0.00	0	$0.00
G	Sediment Log (9-Inch Diameter)	L.F.	20	$4.00	$80.00	0	$0.00	0	$0.00	0	$0.00
Q	Remove Select Tree	Each	1	$300.00	$300.00	0	$0.00	0	$0.00	0	$0.00
O	MN/DOT Class III Riprap (Field Stone) with Geotextile Filter Fabric	Ton	10	$120.00	$1,200.00	0	$0.00	0	$0.00	0	$0.00
Site 10 - Arlington Ave. & Currie St. Pond Maintenance											
N	Construction Entrance	Each	1	$1,000.00	$1,000.00	1	$1,000.00	0	$0.00	1	$1,000.00

2025 Capital Improvement Project (CIP)
Ramsey-Washington Metro Watershed District
Summary of Work Completed Through February 18th, 2025 for Progress Payment Number 1

						(1) Total Completed Through This Period		(2) Total Completed Previous Period		(3) Total Completed This Period	
Item	Description	Unit	Estimated Quantity	Unit Price	Extension	Quantity	Amount	Quantity	Amount	Quantity	Amount
D	Sediment/Muck Cleanout Excavation, Loading, Hauling and Offsite Delivery of Unregulated Material (SRV Level 1)	Ton	816	$20.00	$16,320.00	818	$16,360.00	0	$0.00	818	$16,360.00
E	Disposal Only Fee for Regulated Material (SRV Level 2 and 3)	Ton	816	$13.00	$10,608.00	818	$10,634.00	0	$0.00	818	$10,634.00
F	Site Restoration (Seeding and Erosion Control Blanket)	S.Y.	400	$4.00	$1,600.00	0	$0.00	0	$0.00	0	$0.00
G	Sediment Log (9-Inch Diameter)	L.F.	40	$4.00	$160.00	0	$0.00	0	$0.00	0	$0.00
Q	Remove Select Tree	Each	3	$300.00	$900.00	3	$900.00	0	$0.00	3	$900.00
O	MN/DOT Class III Riprap (Field Stone) with Geotextile Filter Fabric	Ton	10	$120.00	$1,200.00	10	$1,200.00	0	$0.00	10	$1,200.00
Site 11 - Kowalski Ponds Maintenance											
N	Construction Entrance	Each	2	$3,000.00	$6,000.00	1	$3,000.00	0	$0.00	1	$3,000.00
D	Disposal Only Fee for Regulated Material (SRV Level Sediment/Muck Cleanout Excavation, Loading, Hauling and Offsite Delivery of Unregulated Material (SRV Level 1)	Ton	1,400	$20.00	$28,000.00	1,292	$25,840.00	0	$0.00	1,292	$25,840.00
E	Disposal Only Fee for Regulated Material (SRV Level 2 and 3)	Ton	1,400	$13.00	$18,200.00	1,292	$16,796.00	0	$0.00	1,292	$16,796.00
F	Site Restoration (Seeding and Erosion Control Blanket)	S.Y.	1,500	$4.00	$6,000.00	0	$0.00	0	$0.00	0	$0.00
G	Sediment Log (9-Inch Diameter)	L.F.	1	$4.00	$4.00	0	$0.00	0	$0.00	0	$0.00
Q	Remove Select Tree	Each	2	$300.00	$600.00	2	$600.00	0	$0.00	2	$600.00
O	MN/DOT Class III Riprap (Field Stone) with Geotextile Filter Fabric	Ton	30	$120.00	$3,600.00	0	$0.00	0	$0.00	0	$0.00
P	Inlet Protection	Each	2	$250.00	$500.00	1	$250.00	0	$0.00	1	$250.00
Site 12 - Kohlman Lake Maintenance											
N	Construction Entrance	Each	1	$2,000.00	$2,000.00	0	$0.00	0	$0.00	0	$0.00
D	Sediment/Muck Cleanout Excavation, Loading, Hauling and Offsite Delivery of Unregulated Material (SRV Level 1)	Ton	371	$20.00	$7,420.00	0	$0.00	0	$0.00	0	$0.00
E	Disposal Only Fee for Regulated Material (SRV Level 2 and 3)	Ton	371	$13.00	$4,823.00	0	$0.00	0	$0.00	0	$0.00
F	Site Restoration (Seeding and Erosion Control Blanket)	S.Y.	300	$4.00	$1,200.00	0	$0.00	0	$0.00	0	$0.00
G	Sediment Log (9-Inch Diameter)	L.F.	120	$4.00	$480.00	0	$0.00	0	$0.00	0	$0.00
M	Flotation Silt Curtain	L.F.	380	$25.00	$9,500.00	0	$0.00	0	$0.00	0	$0.00
N	Composite Mud Mats	S.Y.	200	$15.00	$3,000.00	0	$0.00	0	$0.00	0	$0.00
P	Inlet Protection	Each	2	$250.00	$500.00	0	$0.00	0	$0.00	0	$0.00
O	MN/DOT Class III Riprap (Field Stone) with Geotextile Filter Fabric	Ton	10	$120.00	$1,200.00	0	$0.00	0	$0.00	0	$0.00
R	Remove and Dispose of Existing Catch Basin Manhole	L.S.	1	$1,500.00	$1,500.00	0	$0.00	0	$0.00	0	$0.00
S	60" Precast Catch Basin Manhole with 4' Sump, Complete	L.S.	1	$25,000.00	$25,000.00	0	$0.00	0	$0.00	0	$0.00
Site 13 - SC220 Pond Maintenance											
N	Construction Entrance	Each	1	$3,000.00	$3,000.00	0	$0.00	0	$0.00	0	$0.00
D	Sediment/Muck Cleanout Excavation, Loading, Hauling and Offsite Delivery of Unregulated Material (SRV Level 1)	Ton	742	$20.00	$14,840.00	990	$19,800.00	0	$0.00	990	$19,800.00
E	Disposal Only Fee for Regulated Material (SRV Level 2 and 3)	Ton	742	$13.00	$9,646.00	990	$12,870.00	0	$0.00	990	$12,870.00
F	Site Restoration (Seeding and Erosion Control Blanket)	S.Y.	800	$4.00	$3,200.00	0	$0.00	0	$0.00	0	$0.00
G	Sediment Log (9-Inch Diameter)	L.F.	80	$4.00	$320.00	0	$0.00	0	$0.00	0	$0.00
Q	Remove Select Tree	Each	1	$300.00	$300.00	1	$300.00	0	$0.00	1	$300.00
M	Flotation Silt Curtain	L.F.	30	$25.00	$750.00	30	$750.00	0	$0.00	30	$750.00

2025 Capital Improvement Project (CIP)
Ramsey-Washington Metro Watershed District
Summary of Work Completed Through February 18th, 2025 for Progress Payment Number 1

						(1) Total Completed Through This Period		(2) Total Completed Previous Period		(3) Total Completed This Period	
Item	Description	Unit	Estimated Quantity	Unit Price	Extension	Quantity	Amount	Quantity	Amount	Quantity	Amount
P	Inlet Protection	Each	4	$250.00	$1,000.00	2	$500.00	0	$0.00	2	$500.00
O	MN/DOT Class III Riprap (Field Stone) with Geotextile Filter Fabric	Ton	30	$120.00	$3,600.00	0	$0.00	0	$0.00	0	$0.00
Site 14 - SC235 Pond Maintenance											
N	Construction Entrance	Each	1	$1,000.00	$1,000.00	1	$1,000.00	0	$0.00	1	$1,000.00
D	Sediment/Muck Cleanout Excavation, Loading, Hauling and Offsite Delivery of Unregulated Material (SRV Level 1)	Ton	1,526	$20.00	$30,520.00	1,716	$34,320.00	0	$0.00	1,716	$34,320.00
E	Disposal Only Fee for Regulated Material (SRV Level 2 and 3)	Ton	1,526	$13.00	$19,838.00	1,716	$22,308.00	0	$0.00	1,716	$22,308.00
F	Site Restoration (Seeding and Erosion Control Blanket)	S.Y.	1,000	$4.00	$4,000.00	0	$0.00	0	$0.00	0	$0.00
G	Sediment Log (9-Inch Diameter)	L.F.	100	$4.00	$400.00	0	$0.00	0	$0.00	0	$0.00
Q	Remove Select Tree	Each	1	$300.00	$300.00	1	$300.00	0	$0.00	1	$300.00
M	Flotation Silt Curtain	L.F.	30	$25.00	$750.00	50	$1,250.00	0	$0.00	50	$1,250.00
P	Inlet Protection	Each	2	$250.00	$500.00	2	$500.00	0	$0.00	2	$500.00
O	MN/DOT Class III Riprap (Field Stone) with Geotextile Filter Fabric	Ton	20	$120.00	$2,400.00	0	$0.00	0	$0.00	0	$0.00
				Contract Base Extensions =	$969,123.00		$368,302.00		$0.00		$368,302.00
Change Order 1											
C.O.1.A	Woodbury Ponds - Overflow Structure Replacement	Each	2	$12,500.00	$25,000.00	0	$0.00	0	$0.00	0	$0.00
						0	$0.00	0	$0.00	0	$0.00
				Change Order Extensions =	$25,000.00		$0.00		$0.00		$0.00
				Contract Grand Total =	**$994,123.00**		**$368,302.00**		**$0.00**		**$368,302.00**

Cottage Place Wetland Restoration
Progress Payment Number 1 - Dimke Excavating

1.0	Total Completed Through This Period:	$58,547.00		
2.0	Total Previously Completed:		$ -	
3.0	Total Completed This Period:			$58,547.00
4.0	Amount Previously Retained:		$0.00	
5.0	Amount Retained This Period (See Note 1):			$2,927.35
6.0	Total Amount Retained (See Note 1):		$2,927.35	
7.0	Retainage Released Through This Period:			$0.00
8.0	Total Retainage Remaining:		$2,927.35	
9.0	Amount Previously Paid:	$0.00		
10.0	Amount Due This Estimate:			$55,619.65

Note 1: At a rate of 5%

Note 2:	Original contract price:	$ 314,197.25
	Change Order 1:	$ 1,419.00
	Current contract price:	$ 315,616.25

SUBMITTED BY:

Name: Brandon Donovan Date: 2/3/2025

Title: Project Manager

Contractor: Dimke Excavating Inc.

Signature: Brandon Donovan

RECOMMENDED BY:

Name: Brendan Dougherty Date: 2/3/2025

Title: Project Engineer

Engineer: Barr Engineering Company

Signature: Brendan Dougherty

APPROVED BY:

Name: Val Eisele Date:

Title: President

Owner: Ramsey-Washington Metro Watershed District

Signature:

Cottage Place Wetland Restoration
Ramsey-Washington Metro Watershed District
Summary of Work Completed Through January 24, 2025 for Progress Payment Number 1

						Total Completed Through this Period		Total Completed Through Previous Periods		Completed This Period	
Item	Description	Unit	Bidding Estimated Quantity	Unit Price	Extension	Quantity	Amount	Quantity	Amount	Quantity	Amount
A	Mobilization	LS	1	$29,875.00	$ 29,875.00	-	$ -		$ -	0.0	$ -
B	Vehicle and Pedestrian Traffic Control	LS	1	$5,500.00	$ 5,500.00	-	$ -		$ -	0.0	$ -
C	Construction Layout and Staking	LS	1	$5,750.00	$ 5,750.00	-	$ -		$ -	0.0	$ -
D	Rock Construction Exit	EA	1	$1,725.00	$ 1,725.00	0.8	$ 1,380.00		$ -	0.8	$ 1,380.00
E	Rock Filter Dike	EA	2	$2,650.00	$ 5,300.00	-	$ -		$ -	0.0	$ -
F	Inlet Protection	EA	5	$265.00	$ 1,325.00	-	$ -		$ -	0.0	$ -
G	Silt Fence	LF	2255	$3.35	$ 7,554.25	-	$ -		$ -	0.0	$ -
H	Sediment Control Log	LF	767	$3.45	$ 2,646.15	260	$ 897.00		$ -	260.0	$ 897.00
I	Tree Protection Fencing	LF	501	$8.00	$ 4,008.00	-	$ -		$ -	0.0	$ -
J	Clearing and Grubbing (<8" Caliper Trees and Shrubs)	LS	1	$12,875.00	$ 12,875.00	1	$ 12,875.00		$ -	1.0	$ 12,875.00
K	Remove and Dispose Tree (>8" Caliper)	EA	263	$165.00	$ 43,395.00	263	$ 43,395.00		$ -	263.0	$ 43,395.00
L	Remove Storm Sewer Pipe	LF	36	$63.00	$ 2,268.00	-	$ -		$ -	0.0	$ -
M	Remove and Replace Trash Grate	EA	1	$1,185.00	$ 1,185.00	-	$ -		$ -	0.0	$ -
N	Storm Sewer Pipe - 18" RCP	LF	75	$165.00	$ 12,375.00	-	$ -		$ -	0.0	$ -
O	18" RC Flared End Section	EA	4	$2,650.00	$ 10,600.00	-	$ -		$ -	0.0	$ -
P	Riprap - MnDOT Class III	CY	41	$175.00	$ 7,175.00	-	$ -		$ -	0.0	$ -
Q	Test Trenching	HOUR	8	$200.00	$ 1,600.00	-	$ -		$ -	0.0	$ -
R	Salvage and Respread Existing Topsoil (P)	CY	1841	$7.00	$ 12,887.00	-	$ -		$ -	0.0	$ -
S	Common Excavation (P)	CY	1194	$5.75	$ 6,865.50	-	$ -		$ -	0.0	$ -
T	Haul and Dispose of Clean Debris Offsite (P)	CY	197	$51.00	$ 10,047.00	-	$ -		$ -	0.0	$ -
U	Common Embankment (P)	CY	997	$5.75	$ 5,732.75	-	$ -		$ -	0.0	$ -
V	Grade 2 Compost	CY	123	$64.00	$ 7,872.00	-	$ -		$ -	0.0	$ -
W	Invasive Species Removal and Control	EA	2	$3,500.00	$ 7,000.00	-	$ -		$ -	0.0	$ -
X	Soil Bed Preparation - Fine Grading and Power Rototilling (P)	AC	5	$620.00	$ 3,100.00	-	$ -		$ -	0.0	$ -
Y	Herbaceous Plug	EA	1224	$7.50	$ 9,180.00	-	$ -		$ -	0.0	$ -
Z	Shrub (#2 Gallon Container)	EA	85	$83.00	$ 7,055.00	-	$ -		$ -	0.0	$ -
AA	Shrub (#5 Gallon Container)	EA	137	$87.50	$ 11,987.50	-	$ -		$ -	0.0	$ -
BB	Deciduous Tree (#10, Cont.)	EA	55	$400.00	$ 22,000.00	-	$ -		$ -	0.0	$ -
CC	Native Seeding (Mesic) (P)	AC	1.9	$3,100.00	$ 5,890.00	-	$ -		$ -	0.0	$ -
DD	Native Seeding (Upland) (P)	AC	0.4	$2,475.00	$ 990.00	-	$ -		$ -	0.0	$ -
EE	Native Seeding (Wetland) (P)	AC	2.7	$3,100.00	$ 8,370.00	-	$ -		$ -	0.0	$ -
FF	Erosion Control Blanket	SY	1855	$3.60	$ 6,678.00	-	$ -		$ -	0.0	$ -
GG	Straw Mulch	AC	4.6	$916.00	$ 4,213.60	-	$ -		$ -	0.0	$ -
HH	Twice Shredded Hardwood Mulch (P)	CY	9	$87.50	$ 787.50	-	$ -		$ -	0.0	$ -
II	Vegetation Establishment Year 1	LS	1	$9,785.00	$ 9,785.00	-	$ -		$ -	0.0	$ -
JJ	Vegetation Establishment Year 2	LS	1	$9,300.00	$ 9,300.00	-	$ -		$ -	0.0	$ -
KK	Vegetation Establishment Year 3	LS	1	$9,300.00	$ 9,300.00	-	$ -		$ -	0.0	$ -
CO1	Removal of Tree House and Disposal of Materials	LS	1	$ 1,419.00	$ 1,419.00	-	$ -		$ -	0.0	$ -
	TOTAL BASE BID				**$ 314,197.25**	[1]	**$ 58,547.00**		**$ -**		**$ 58,547.00**

Beltline Mississippi River Branch Outfall Replacement Progress Payment 1

1.0	Total Completed Through This Period:	$34,375.00		
2.0	Total Completed Previously Completed:		$0.00	
3.0	Total Completed This Period:			$34,375.00
4.0	Amount Previously Retained:		$0.00	
5.0	Amount Retained This Period:			$1,718.75
6.0	Total Amount Retained:		$1,718.75	
7.0	Retainage Released Through This Period:			$0.00
8.0	Total Retainage Remaining:		$1,718.75	
9.0	Amounts Previously Paid:	$0.00		
10.0	Amount Due This Estimate:			$32,656.25

Retainage shall be 5 percent of the value of the Work completed.

SUBMITTED BY:

Name: Josh Phleger Date: 12/2/2024

Title: Project Manager

Contractor: Minger Construction Companies, Inc.

Signature: Joshua M. Phleger Digitally signed by Joshua M. Phleger DN: C=US, E=joshp@mingerconst.com, O="Minger Construction Inc. ", CN=Joshua M. Phleger Date: 2024.12.03 15:07:02-06'00'

RECOMMENDED BY:

Name: Nathan Campeau Date: 12/2/2024

Title: Principle-in-Charge

Engineer: Barr Engineering Co.

Signature:

APPROVED BY:

Name: Val Eisele Date:

Title: President

Owner: Ramsey-Washington Metro Watershed District

Signature:

Beltline Mississippi River Branch Outfall Replacement
Ramsey-Washington Metro Watershed District
Summary of Work Completed Through November 12, 2024 for Progress Payment Number 1

						(1) Total Completed Through This Period		(2) Total Completed Previous Period		(3) Total Completed This Period	
Item	Description	Unit	Estimated Quantity	Unit Price	Extension	Quantity	Amount	Quantity	Amount	Quantity	Amount
1A	Mobilization - Permits, Bonds, Exploratory	LS	1	$7,725.00	$7,725.00	1.00	$7,725.00	0	$0.00	1.00	$7,725.00
1B	Mobilization - River Cofferdam	LS	1	$19,275.00	$19,275.00	0.00	$0.00	0	$0.00	0.00	$0.00
1C	Mobilization - Pipe and MH Shoring	LS	1	$20,000.00	$20,000.00	0.00	$0.00	0	$0.00	0.00	$0.00
1D	Mobilization - Clean Up	LS	1	$4,500.00	$4,500.00	0.00	$0.00	0	$0.00	0.00	$0.00
2	Construction Layout and Staking	LS	1	$5,000.00	$5,000.00	0.00	$0.00	0	$0.00	0.00	$0.00
3	Traffic Control	LS	1	$1,500.00	$1,500.00	0.00	$0.00	0	$0.00	0.00	$0.00
4	Sediment Control Log	LF	250	$5.00	$1,250.00	0.00	$0.00	0	$0.00	0.00	$0.00
5	Flotation Silt Curtain	LF	40	$20.00	$800.00	0.00	$0.00	0	$0.00	0.00	$0.00
6	Temporary Construction Entrance	EA	1	$2,500.00	$2,500.00	0.00	$0.00	0	$0.00	0.00	$0.00
7A	Dewatering and Control of Water - Deep Wells	LS	1	$150,000.00	$150,000.00	0.05	$7,500.00	0	$0.00	0.05	$7,500.00
7B	Dewatering and Control of Water - Storm Bulkhead & Bypass	LS	1	$63,000.00	$63,000.00	0.05	$3,150.00	0	$0.00	0.05	$3,150.00
7C	Dewatering and Control of Water - Cofferdam Dewatering	LS	1	$15,000.00	$15,000.00	0.00	$0.00	0	$0.00	0.00	$0.00
8A	Temporary Excavation Support - River Cofferdam	LS	1	$200,000.00	$200,000.00	0.05	$10,000.00	0	$0.00	0.05	$10,000.00
8B	Temporary Excavation Support - RCP Shoring	LS	1	$150,000.00	$150,000.00	0.00	$0.00	0	$0.00	0.00	$0.00
8C	Temporary Excavation Support - MH Shoring	LS	1	$100,000.00	$100,000.00	0.00	$0.00	0	$0.00	0.00	$0.00
9	Common Excavation (P)	CY	600	$25.00	$15,000.00	0.00	$0.00	0	$0.00	0.00	$0.00
10	Removal and Disposal of 9' Dia. Steel Pipe and Transition Section	LF	52	$75.00	$3,900.00	0.00	$0.00	0	$0.00	0.00	$0.00
11	Saw Cut Existing 9' Dia. RCP	LS	1	$5,500.00	$5,500.00	0.00	$0.00	0	$0.00	0.00	$0.00
12	Removal and Disposal of Storm Vault	LS	1	$9,000.00	$9,000.00	0.00	$0.00	0	$0.00	0.00	$0.00
13	Modify Existing Sheet Pile Wall	LS	1	$9,000.00	$9,000.00	0.00	$0.00	0	$0.00	0.00	$0.00
14	Crushed Stone Bedding	TON	60	$85.00	$5,100.00	0.00	$0.00	0	$0.00	0.00	$0.00
15	Construct Manhole Structure	LS	1	$120,000.00	$120,000.00	0.00	$0.00	0	$0.00	0.00	$0.00
16	9' Dia. Class III RCP	LF	51	$1,900.00	$96,900.00	0.00	$0.00	0	$0.00	0.00	$0.00
17	Connect Existing 9' Dia. RCP to Manhole Structure	LS	1	$10,000.00	$10,000.00	0.00	$0.00	0	$0.00	0.00	$0.00
18	Connect 9' Dia. RCP to Manhole Structure	LS	1	$10,000.00	$10,000.00	0.00	$0.00	0	$0.00	0.00	$0.00
19	RCP Collar and Sheet Pile Wall Interface	LS	1	$17,500.00	$17,500.00	0.00	$0.00	0	$0.00	0.00	$0.00
20	Lean Concrete Backfill	CY	110	$475.00	$52,250.00	0.00	$0.00	0	$0.00	0.00	$0.00
21	Timber Bumper	LF	20	$225.00	$4,500.00	0.00	$0.00	0	$0.00	0.00	$0.00
22	Common Backfill (P)	CY	230	$20.00	$4,600.00	0.00	$0.00	0	$0.00	0.00	$0.00
23	Class 5 Aggregate	TON	70	$70.00	$4,900.00	0.00	$0.00	0	$0.00	0.00	$0.00
24	Common Excavation, Stockpile and Dispose of Regulated Material (P)	TON	528	$60.00	$31,680.00	0.00	$0.00	0	$0.00	0.00	$0.00
				Contract Base Extensions =	$1,140,380.00		$28,375.00		$0.00		$28,375.00
Change Order 1											
C.O.1.A	Additional Site Investigation	LS	1	$6,000.00	$6,000.00	1	$6,000.00	0	$0.00	1	$6,000.00
	Access Hatch Replacement	LS	1	$6,900.00	$6,900.00	0	$0.00	0	$0.00	0	$0.00
				Change Order Extensions =	$12,900.00		$6,000.00		$0.00		$6,000.00
				Contract Grand Total =	**$1,153,280.00**		**$34,375.00**		**$0.00**		**$34,375.00**

Galowitz Olson, PLLC
10390 39th Street North
Lake Elmo, Minnesota 55042
Office: (651) 777-6960
Fax: (651) 777-8937

Ramsey-Washington Metro Watershed District
C/O Tina Carstens
2665 Noel Drive
Little Canada MN 55117

February 20, 2025
File No: 9M

	Balance
General Account	$2,035.00

Payment can be made over the phone, by check, or online at www.galowitzolson.com/make-a-payment.

Permit Application Coversheet

Date March 05, 2025

Project Name Papenheims Victoria Valley Orchard Project Number 25-04

Applicant Name Marty Harstad, Harstad Hills, Inc.

Type of Development Residential

Property Description

This project is located off Victoria Street, southwest of Snail Lake in the City of Shoreview. The applicant is proposing to construct a single-family home residential development with associated grading, street construction, and utilities. The total disturbed area is approximately 4.5 acres. A filtration basin is proposed to meet stormwater treatment requirements. Pretreatment methods include a sumped manhole, grass swale, and sediment forebay. Filtration is being proposed due to poor soils. The site is a former operational apple orchard. The applicant submitted and received approval of a 'no-wetland determination' for the site in September 2024 (#24-20 WCA).

Watershed District Policies or Standards Involved:

- ☐ *Wetlands*
- ☑ *Erosion and Sediment Control*
- ☑ *Stormwater Management*
- ☐ *Floodplain*

Water Quantity Considerations

The proposed stormwater management plan is sufficient to handle the runoff from the site.

Water Quality Considerations

Short Term

The proposed erosion and sediment control plan is sufficient to protect downstream water resources during construction.

Long Term

The proposed stormwater management plan is sufficient to protect the long term quality of downstream water resources.

Staff Recommendation

Staff recommends approval of this permit with the special provisions.

Attachments:

- ☑ Project Location Map
- ☑ Project Grading Plan

#25-04 Papenheims Victoria Valley Orchard

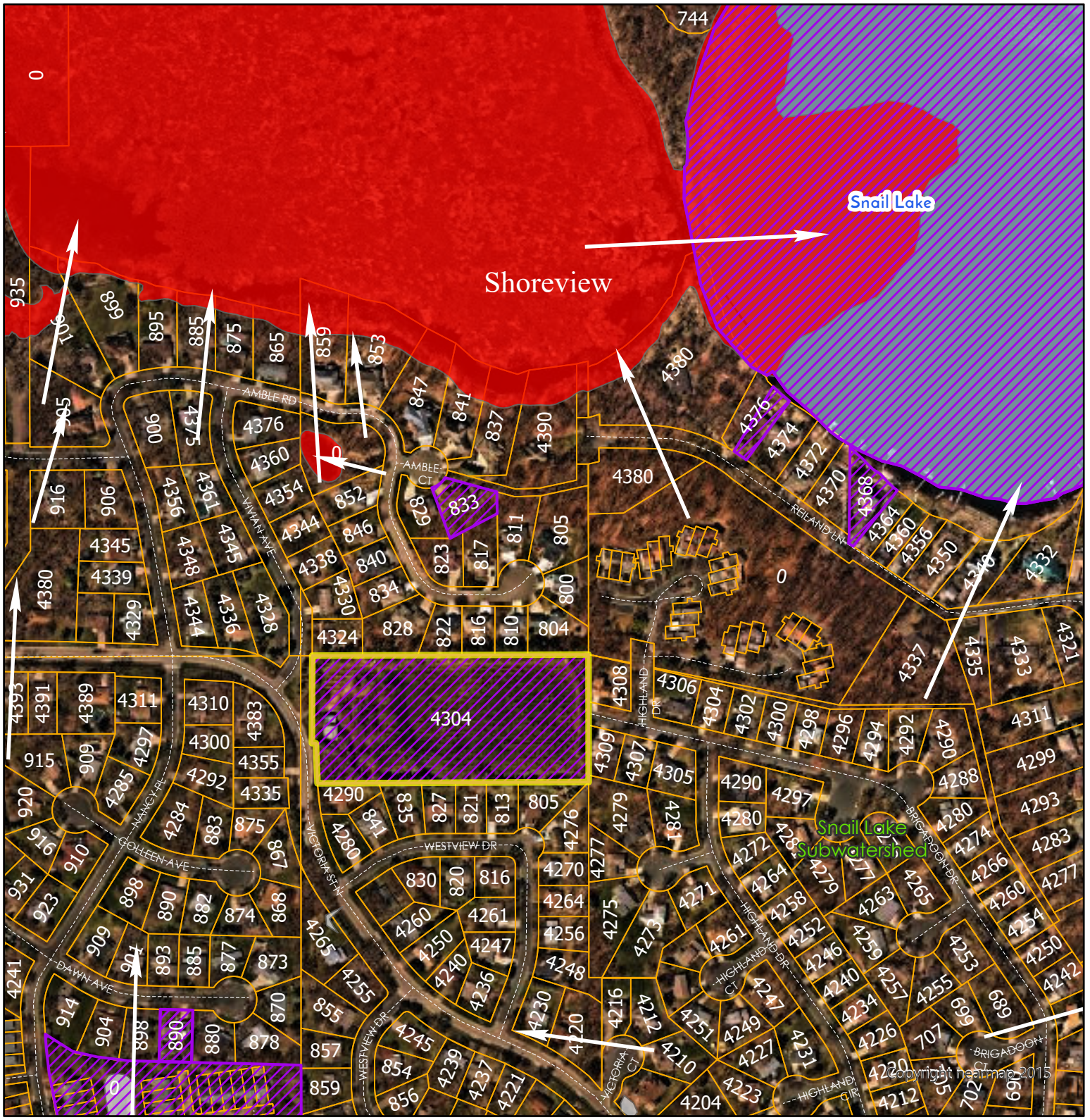

Wetlands
- Manage A
- Manage B
- Manage C
- Lake
- Sediment Pond
- Not Assessed

- Flow Arrows
- Roads
- Permits
- Cities
- Subwatersheds
- Lakes
- Ramsey Co Parcels
- RWMWD Boundary

Highlighted Areas Represent Active Permit

Miles: 0 — 0.05 — 0.1

US Feet: 0 — 300 — 600

N

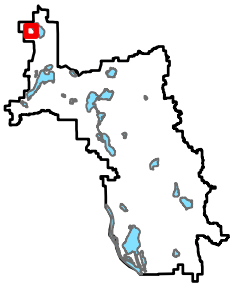

25-04

Special Provisions

1. The applicant shall submit the escrow payment of $23,000.

2. The applicant shall submit the final, signed plans set.

3. The applicant shall submit an executed stormwater maintenance agreement if the basin will be privately owned/maintained via HOA.

4. The applicant shall submit a site-specific BMP Operations & Maintenance Plan for the proposed stormwater facilities. Include a narrative description of the facilities, their intended purpose, a labeled figure/plan sheet, and examples of companies that complete required maintenance.

5. The applicant shall submit contact information for the trained erosion control coordinator responsible for implementing the Stormwater Pollution Prevention Plan (SWPPP).

6. The applicant shall submit a copy of the approved Minnesota Pollution Control Agency's NPDES Construction Permit coverage for the project.

GRADING, EROSION CONTROL AND TREE PROTECTION PLAN

~of~ PAPENHEIMS VICTORIA VALLEY ORCHARD

~for~ HARSTAD HILLS, INC.

TYPICAL LOT

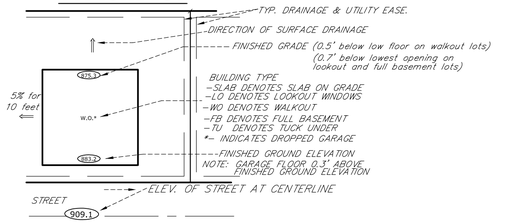

LEGEND

- DENOTES CATCH BASIN
- DENOTES STORM SEWER APRON
- DENOTES STORM SEWER MANHOLE
- DENOTES TELEPHONE PEDESTAL
- DENOTES WATER VALVE
- DENOTES FENCE
- DENOTES RETAINING WALL
- DENOTES PROPOSED RETAINING WALL
- DENOTES EXISTING SANITARY SEWER
- DENOTES EXISTING STORM SEWER
- DENOTES EXISTING WATER MAIN
- DENOTES OVERHEAD UTILITY
- DENOTES SOIL BORING BY HAUGO GEOTECHNICAL SERVICES
- 899.0 DENOTES EMERGENCY OVERFLOW ELEVATION
- X 952.36 DENOTES EXISTING SPOT ELEVATION
- DENOTES EXISTING 2 FOOT CONTOUR
- DENOTES PROPOSED 2 FOOT CONTOURS
- DENOTES EASEMENT LINE
- BLDSB DENOTES SETBACK LINE
- DENOTES PROPOSED STORM SEWER
- DENOTES PROPOSED SILT FENCE
- DENOTES PROPOSED BIO ROLL
- DENOTES PROPOSED TREE PROTECTION FENCE
- DENOTES DIRECTION OF DRAINAGE
- 905.3 DENOTES PROPOSED ELEVATION
- DENOTES RIPRAP
- DENOTES PROPOSED STORM SEWER INLET PRETECTION
- DENOTES ROCK CONSTRUCTION ENTRANCE
- DENOTES MAINTENANCE ACCESS

PROVIDE INLET SEDIMENT CONTROL FOR ALL NEW STORM SEWER INLETS WITHIN 24 HOURS OF STRUCTURE INSTALLATION. PROVIDE ALSO FOR EXISTING STORM SEWER INLETS ADJACENT TO THE SITE DURING CONSTRUCTION. LEAVE IN-PLACE UNTIL SITE HAS BEEN STABILIZED (TYP)

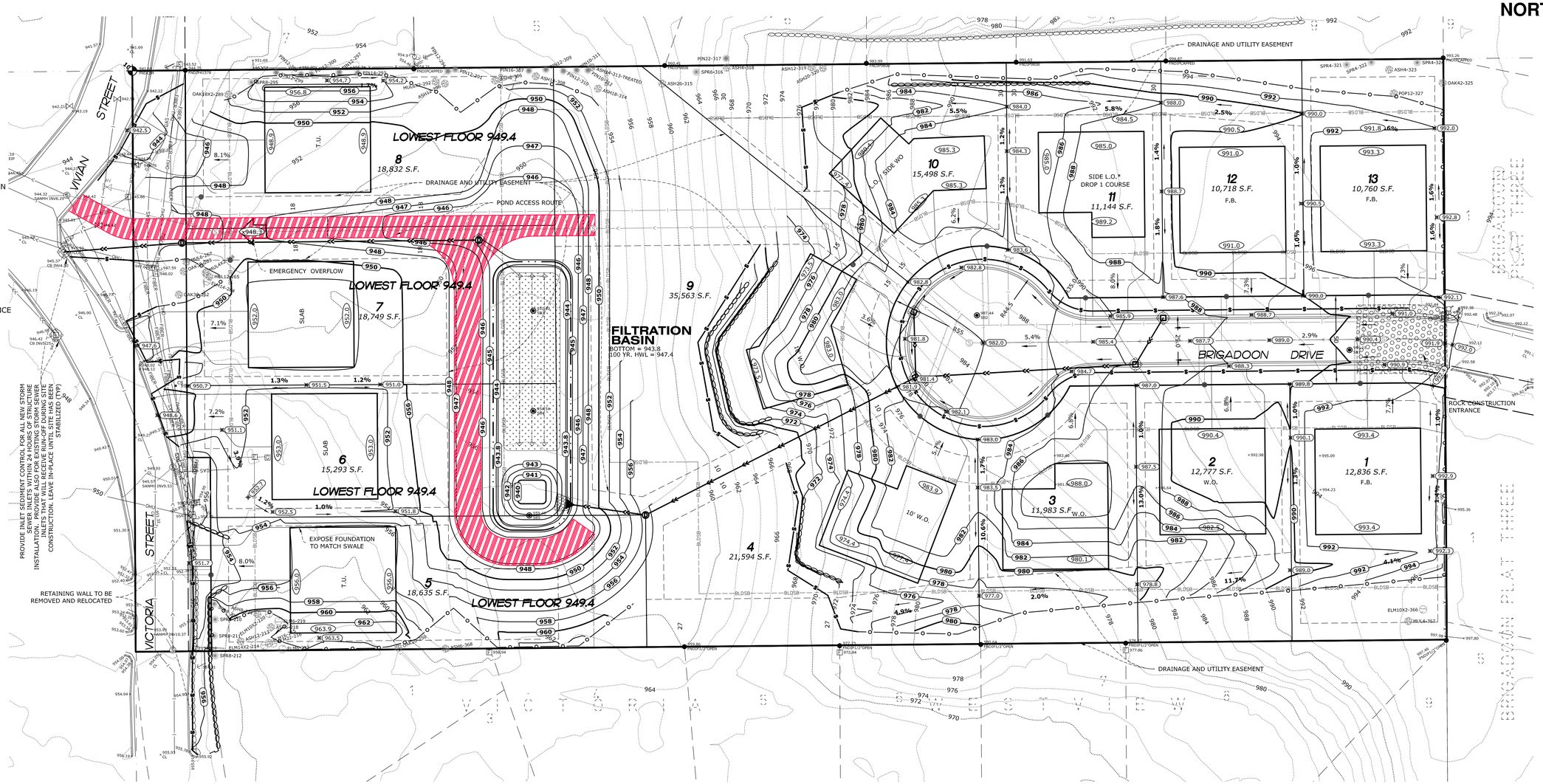

PONDING CALCULATIONS AND STORM SEWER DESIGN BY PLOWE ENGINEERING, INC.

PLOWE ENGINEERING, INC.
6776 LAKE DRIVE
SUITE 110
LINO LAKES, MN 55014

SITE PLANNING & ENGINEERING
PHONE: (651) 361-8210
FAX: (651) 361-8701

I HEREBY CERTIFY THAT THE STORMWATER MANAGEMENT AND DRAINAGE REPORT FOR THIS PLAN WAS PREPARED BY ME OR UNDER MY DIRECT SUPERVISION AND THAT I AM A DULY LICENSED PROFESSIONAL ENGINEER UNDER THE LAWS OF THE STATE OF MINNESOTA.

ADAM GINKEL

DATE: 02.21.2025 LIC. NO. 43963

E. G. RUD & SONS, INC.
EST. 1977
Professional Land Surveyors
6776 Lake Drive NE, Suite 110
Lino Lakes, MN 55014
Tel. (651) 361-8200 Fax (651) 361-8701
www.egrud.com

EROSION CONTROL / REVEGETATION SPECS.

1. *PRIOR TO ROUGH GRADING, INSTALL SILT STOP FENCE IN LOCATIONS SHOWN. ADDITIONAL SILT STOP FENCE WILL BE REQUIRED WHERE LOCAL CONDITIONS REQUIRE. INSTALL TREE PROTECTION AS DEEMED NECESSARY BY THE CITY FORESTER PRIOR TO ANY GRADING.*
2. *ANY GRADING SHALL PROCEED ON AN AREA BY AREA BASIS TO MINIMIZE UNCOMPLETED AREAS.*
3. *AS EACH AREA OUTSIDE THE STREET IS GRADED, PROVIDE NATIVE TOPSOIL, SEED, AND MULCH ANCHORED WITH A STRAIGHT SET DISC WITHIN SEVEN DAYS AFTER ROUGH GRADING.*
4. *MAINTAIN AND REPAIR SILT STOP FENCES (INCLUDING REMOVAL OF ACCUMULATED SILT) UNTIL VEGETATION IS ESTABLISHED.*
5. *SEE "STORM WATER POLLUTION PREVENTION PLAN" FOR ADDITIONAL EROSION CONTROL NOTES AND SITE SEQUENCING.*

GRADING AND EROSION CONTROL NOTES

a. Notify Mary Fitzgerald, Ramsey-Washington Metro Watershed District, at 651-792-7956 prior to beginning construction activity to schedule an initial erosion control inspection.
b. Notify Mary Fitzgerald, Ramsey-Washington Metro Watershed District, at 651-792-7956 at least 48 hours prior to construction of the filtration basin.
c. The specified erosion and sediment control practices are the minimum. Additional practices may be required during the course of construction.

TREE PROTECTION NOTES

- TREE PROTECTION LIMITS TO BE MARKED IN FIELD PRIOR TO ANY TREE CLEARING ACTIVITY.
- SILT / TREE PROTECTION FENCE TO BE INSTALLED AT CONSTRUCTION LIMIT LINE.
- CARE IS TO BE TAKEN TO AVOID CONSTRUCTION ACTIVITY OR CONSTRUCTION VEHICLE TRAFFIC WITHIN THE DRIP LINE OF TREES IN THE TREE PROTECTION ZONE.
- FIELD DECISIONS WILL BE MADE ON LOCATION OF TREE PROTECTION LIMITS TO PRESERVE SIGNIFICANT TREES.
- SOME TREES AND DEAD FALL ARE TO BE CLEARED. THIS MAY BE DONE PRIOR TO INSTALLATION OF SILT / TREE PROTECTION FENCE. GRUBBING OF STUMPS WILL OCCUR AFTER EROSION CONTROL MEASURES ARE INSTALLED.

NOTES

- Field survey was completed by E.G. Rud and Sons, Inc. in October 2024.
- Bearings shown are on Ramsey County datum.
- Parcel ID Number: 233023420093.
- Curb shots are taken at the top and back of curb.
- Soil borings by Haugo GeoTechnical Services.

BENCHMARK

RAMSEY COUNTY BM: 9021
ELEVATION: 970.554
DATUM: NAVD 88

I hereby certify that this survey, plan or report was prepared by me or under my direct supervision and that I am a duly Registered Land Surveyor under the laws of the State of Minnesota.

JASON E. RUD

Date: 02/21/2025 License No. 41578

GRAPHIC SCALE

30 0 15 30 60 120

1 INCH = 30 FEET

DRAWN BY: MMD	JOB NO: 240269PP	DATE: 01/23/25
CHECK BY: JER	FIELD CREW: BH/BJ	

NO.	DATE	DESCRIPTION	BY
1	02/21/25	WATERSHED COMMENTS	MMD
2			
3			

S:\RUD\CAD\24PROJ\240269PP\240269PP.DWG

BOARD OF WATER AND SOIL RESOURCES

Minnesota Wetland Conservation Act
Notice of Decision

Local Government Unit: Ramsey-Washington Metro Watershed District (RWMWD) **County:** Ramsey
Applicant Name: Martin Harstad (Harstad Hills, Inc.) **Applicant Representative:** Kat Dickerson (Kjolhaug Environmental Services)
Project Name: 4304 Victoria St N **LGU Project No. (if any):** 24-20 WCA
Date Complete Application Received by LGU: 8/15/2024
Date of LGU Decision: 9/12/2024
Date this Notice was Sent: 9/18/2024

WCA Decision Type - check all that apply

☒**Wetland Boundary/Type** ☐**Sequencing** ☐**Replacement Plan** ☐**Bank Plan (not credit purchase)** ☐**No-Loss (8420.0415)** ☐**Exemption (8420.0420)** **Part:** ☐ **A** ☐ **B** ☐ **C** ☐ **D** ☐ **E** ☐ **F** ☐ **G** ☐ **H** **Subpart:** ☐ **2** ☐ **3** ☐ **4** ☐ **5** ☐ **6** ☐ **7** ☐ **8** ☐ **9**

Replacement Plan Impacts (replacement plan decisions only)

Total WCA Wetland Impact Area:
Wetland Replacement Type: ☐ Project Specific Credits: ☐ Bank Credits:
Bank Account Number(s):

Technical Evaluation Panel Findings and Recommendations (attach if any)

☒ Approve ☐ Approve w/Conditions ☐ Deny ☒ No TEP Recommendation

TEP members Nicole Maras (RWMWD- LGU) and Alexis Lipstein (Ramsey County) completed a field review of the site on 9/5/24 with Kat Dickerson (Kjolhaug) and Kendra Kloth (RWMWD). No wetlands are present onsite in accordance with the submitted application.

LGU Decision

☐ Approved with Conditions (specify below)[1] ☒ Approved[1] ☐ Denied

List Conditions:

Decision-Maker for this Application: ☒ Staff ☐ Governing Board/Council ☐ Other:

Decision is valid for: ☒ 5 years (default) ☐ Other (specify):

[1] *Wetland Replacement Plan approval is not valid until BWSR confirms the withdrawal of any required wetland bank credits. For project-specific replacement a financial assurance per MN Rule 8420.0522, Subp. 9 and evidence that all required forms have been recorded on the title of the property on which the replacement wetland is located must be provided to the LGU for the approval to be valid.*

LGU Findings – Attach document(s) and/or insert narrative providing the basis for the LGU decision[1].

☐ Attachment(s) (specify):

☒ Summary: **See TEP Findings and Recommendations.**

[1] *Findings must consider any TEP recommendations.*

Attached Project Documents

☒ Site Location Map ☐ Project Plan(s)/Descriptions/Reports (specify):

Appeals of LGU Decisions

If you wish to appeal this decision, you must provide a written request within 30 calendar days of the date you received the notice. All appeals must be submitted to the Board of Water and Soil Resources Executive Director along with a check payable to BWSR for $500 *unless* the LGU has adopted a local appeal process as identified below. The check must be sent by mail and the written request to appeal can be submitted by mail or e-mail. The appeal should include a copy of this notice, name and contact information of appellant(s) and their representatives (if applicable), a statement clarifying the intent to appeal and supporting information as to why the decision is in error. Send to:

Appeals & Regulatory Compliance Coordinator
Minnesota Board of Water & Soils Resources
520 Lafayette Road North
St. Paul, MN 55155
travis.germundson@state.mn.us

Does the LGU have a local appeal process applicable to this decision?

☐ Yes[1] ☒ No

[1]*If yes, all appeals must first be considered via the local appeals process.*

Local Appeals Submittal Requirements (LGU must describe how to appeal, submittal requirements, fees, etc. as applicable)

Notice Distribution (include name)

Required on all notices:

☒ SWCD TEP Member: **Alexis Lipstein (Ramsey County)** ☒ BWSR TEP Member: **Ben Meyer**
☐ LGU TEP Member (if different than LGU contact):
☒ DNR Representative: **Dan Scollan**
☒ Watershed District or Watershed Mgmt. Org.: **Kendra Kloth/Mary Fitzgerald (RWMWD)**
☒ Applicant (notice only): ☒ Agent/Consultant (notice only): **Mark Kjolhaug (Kjolhaug)**

Optional or As Applicable:

☒ Corps of Engineers:
☐ BWSR Wetland Mitigation Coordinator (required for bank plan applications only):
☐ Members of the Public (notice only): ☒ Other: **chardstad@hgrepartners.com**

Signature: *Nicole Maras*	**Date:** 9/18/2024

This notice and accompanying application materials may be sent electronically or by mail. The LGU may opt to send a summary of the application to members of the public upon request per 8420.0255, Subp. 3.

Permit Application Coversheet

Date March 05, 2025

Project Name North St. Paul 2025 SIP Project Number 25-06

Applicant Name Morgan Dawley, City of North St. Paul

Type of Development Linear

Property Description

This project is located north and east of Casey Lake Park in the City of North St. Paul. The applicant is proposing to reconstruct sections of residential roadways and complete stormwater improvements in the park. An existing filtration basin constructed in 2014 for a previous city project is not functioning properly and has turned into a wet pond. The applicant is proposing to reconstruct and expand the filtration basin to account for previously required stormwater treatment (Permit #14-08) as well as the current project treatment requirements. Excess volume credits will be banked for a future 2027 roadway project, which will be applied for through a future separate permit. Filtration is being proposed due to poor soils and high groundwater, and an impermeable barrier will be installed at the bottom of the basin to prevent inflow. Two RWMWD grant-funded rain gardens installed in 2014 are within the current project corridor. The applicant is aware of these rain gardens and will make every effort to protect them and maintain their functionality. A Wetland Conservation Act (WCA) 'no wetland determination' was approved in November 2024 (#24-24 WCA).

Watershed District Policies or Standards Involved:

- ☐ *Wetlands*
- ☑ *Erosion and Sediment Control*
- ☑ *Stormwater Management*
- ☐ *Floodplain*

Water Quantity Considerations

The proposed stormwater management plan is sufficient to handle the runoff from the site.

Water Quality Considerations

Short Term

The proposed erosion and sediment control plan is sufficient to protect downstream water resources during construction.

Long Term

The proposed stormwater management plan is sufficient to protect the long term quality of downstream water resources.

Staff Recommendation

Staff recommends approval of this permit with the special provisions.

Attachments:

- ☑ Project Location Map
- ☑ Project Grading Plan

#25-06 North St. Paul 2025 SIP

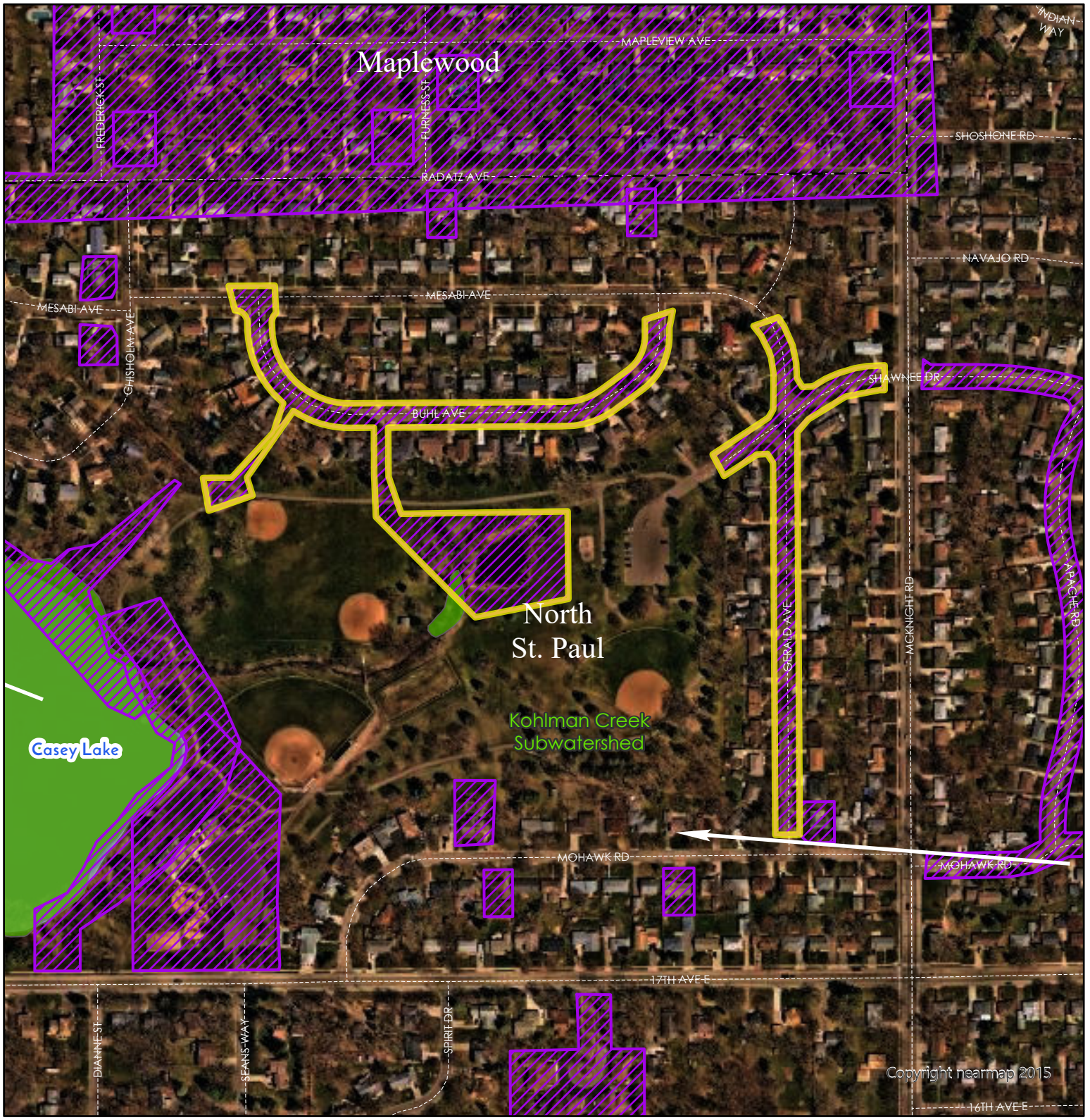

Wetlands
- Manage A
- Manage B
- Manage C
- Lake
- Sediment Pond
- Not Assessed

- Flow Arrows
- Roads
- Permits
- Cities
- Subwatersheds
- Lakes
- RWMWD Boundary

Highlighted Areas
Represent Active Permit

Miles
0 0.05 0.1

US Feet
0 250 500

N

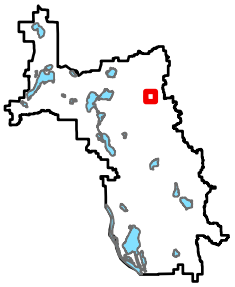

25-06

Special Provisions

1. The applicant shall add notes to the plans:
   A. Notify Mary Fitzgerald, Ramsey-Washington Metro Watershed District, at 651-792-7956 prior to beginning construction activity to schedule an initial erosion control inspection.
   B. Notify Mary Fitzgerald, Ramsey-Washington Metro Watershed District, at 651-792-7956 at least 48 hours prior to reconstruction of the stormwater filtration basin.
   C. The specified erosion and sediment control practices are the minimum. Additional practices may be required during the course of construction.
   D. Add notes to limit disturbance and protect existing RWMWD grant-funded rain gardens.

2. The applicant shall update Sheet 49:
   A. Show drain tile and clean-out locations on plan view of basin.
   B. Show location of drain tile outlet. If daylighting to the ditch consider trash guard and backflow preventer.
   C. Label the 100-year HWL for the basin.

3. The applicant shall label filtration media depth on basin detail (minimum 18”).

4. The applicant shall include a single basin cross-section that labels the clay liner, impermeable geomembrane, or both, depending on what is being proposed.

5. The applicant shall submit the final, signed plans set including erosion control details and final landscaping/restoration.

6, The applicant shall submit contact information for the trained/certified erosion control coordinator responsible for implementing the Stormwater Pollution Prevention Plan (SWPPP).

7. The applicant shall submit a copy of the approved Minnesota Pollution Control Agency's NPDES Construction Permit coverage for the project.

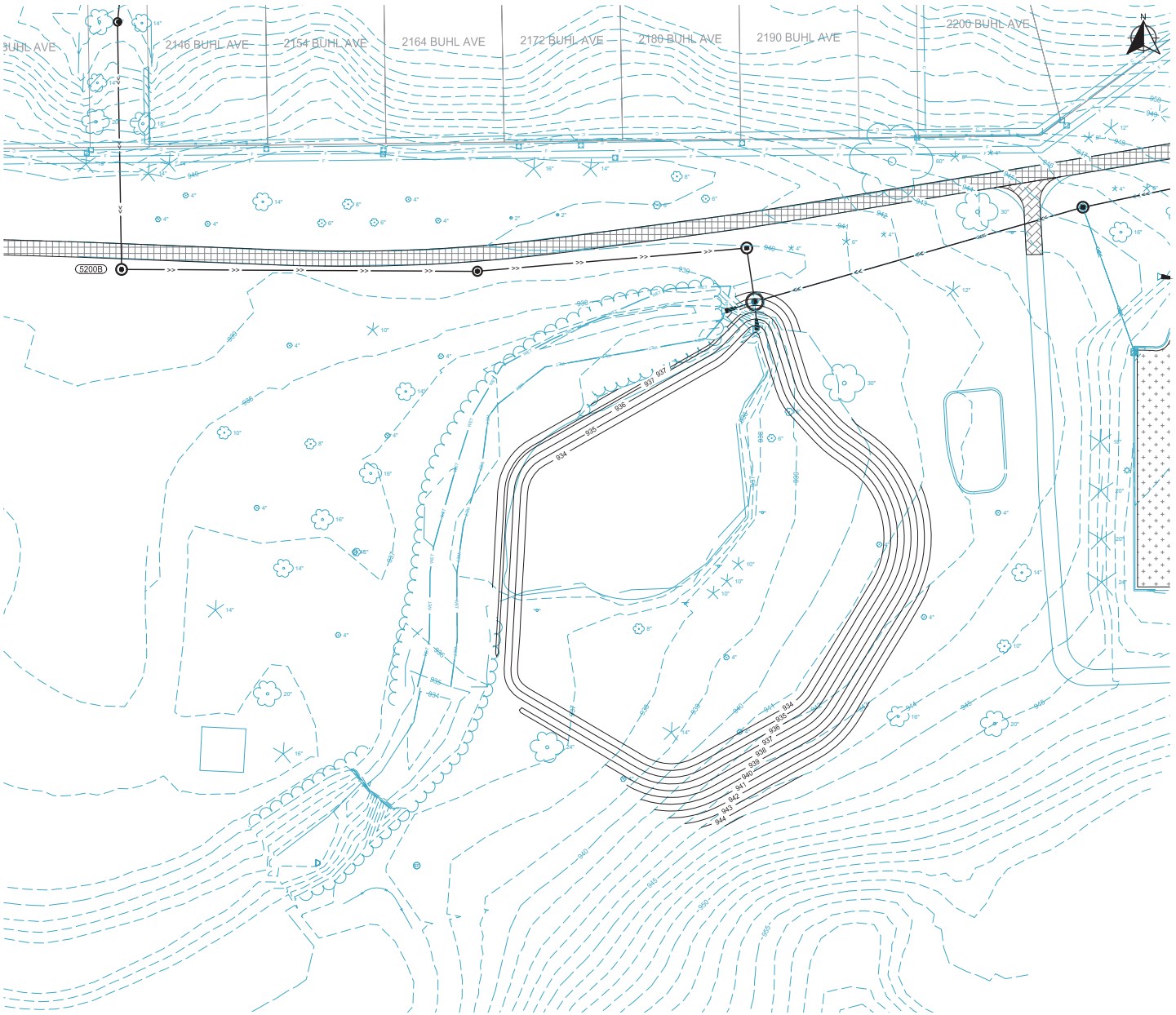

LOCATION

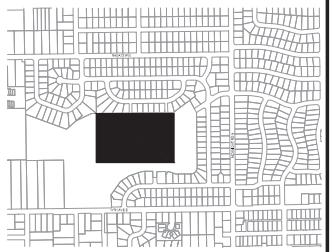

0 30 60
H: SCALE IN FEET

LEGEND

- APPROX. CONSTRUCTION LIMITS
- PROPERTY LINE
- EXISTING EASEMENT
- PROPOSED EASEMENT
- EXISTING CONTOUR (MAJOR)
- EXISTING CONTOUR (MINOR)
- PROPOSED CONTOUR (MAJOR)
- PROPOSED CONTOUR (MINOR)
- EXISTING STORM SEWER PIPE
- EXISTING STORM STRUCTURE
- PROPOSED STORM SEWER PIPE
- PROPOSED DRAINAGE STRUCTURE
- PROPOSED DRAIN TILE PIPE
- PROPOSED FENCE

wsb

NORTH ST.PAUL

SCALE:	DESIGN BY:
AS SHOWN	RJS
PLAN BY:	CHECK BY:
ATH	KWH

REVISIONS

NO.	DATE	DESCRIPTION

I HEREBY CERTIFY THAT THIS PLAN, SPECIFICATION, OR REPORT WAS PREPARED BY ME OR UNDER MY DIRECT SUPERVISION AND THAT I AM A DULY LICENSED PROFESSIONAL ENGINEER UNDER THE LAWS OF THE STATE OF MINNESOTA.

KYLE W. HOFF LIC. NO: 59709

DATE: 02/04/2025

STORM WATER BASIN DETAILS

2025 STREET AND UTILITY IMPROVEMENT PROJECT CITY OF NORTH ST. PAUL, MN

CLIENT PROJECT NO.
CP 25-01

WSB PROJECT NO.
025994-000

SHEET
49 OF 82

C:\ACCACCDocs\WSB\025994-000\Project Files\Civil\Plan\025994-000-C-POND-PLAN.dwg 2/5/2025 11:49:37 AM

BOARD OF WATER AND SOIL RESOURCES

Minnesota Wetland Conservation Act
Notice of Decision

Local Government Unit: Ramsey-Washington Metro Watershed District (RWMWD) **County:** Ramsey
Applicant Name: Morgan Dawley (WSB/City of North St. Paul) **Applicant Representative:** Roxy Robertson (WSB)
Project Name: North St. Paul 2025 SIP **LGU Project No. (if any):** 24-24 WCA
Date Complete Application Received by LGU: 9/26/2024
Date of LGU Decision: 11/7/2024
Date this Notice was Sent: 11/12/2024

WCA Decision Type - check all that apply

☒**Wetland Boundary/Type** ☐**Sequencing** ☐**Replacement Plan** ☐**Bank Plan (not credit purchase)**
☐**No-Loss (8420.0415)** ☐**Exemption (8420.0420)**
Part: ☐ **A** ☐ **B** ☐ **C** ☐ **D** ☐ **E** ☐ **F** ☐ **G** ☐ **H** **Subpart:** ☐ **2** ☐ **3** ☐ **4** ☐ **5** ☐ **6** ☐ **7** ☐ **8** ☐ **9**

Replacement Plan Impacts (replacement plan decisions only)

Total WCA Wetland Impact Area:
Wetland Replacement Type: ☐ Project Specific Credits: ☐ Bank Credits:
Bank Account Number(s):

Technical Evaluation Panel Findings and Recommendations (attach if any)

☒ Approve ☐ Approve w/Conditions ☐ Deny ☐ No TEP Recommendation

TEP member Nicole Maras (RWMWD-LGU) commented on 10/10/24 that Wetland 1 is a constructed stormwater facility, a filtration basin that never drained dry due to groundwater influence. A grading sheet and aerial photos were provided. Wetland 1 in the delineation report should be renamed as a Stormwater Basin/Pond. An updated report was submitted on 11/7/24 incorporating the change.

LGU Decision

☐ Approved with Conditions (specify below)[1] ☒ Approved[1] ☐ Denied

List Conditions:

Decision-Maker for this Application: ☒ Staff ☐ Governing Board/Council ☐ Other:

Decision is valid for: ☒ 5 years (default) ☐ Other (specify):

[1] *Wetland Replacement Plan approval is not valid until BWSR confirms the withdrawal of any required wetland bank credits. For project-specific replacement a financial assurance per MN Rule 8420.0522, Subp. 9 and evidence that all required forms have been recorded on the title of the property on which the replacement wetland is located must be provided to the LGU for the approval to be valid.*

LGU Findings – Attach document(s) and/or insert narrative providing the basis for the LGU decision[1].

☒ Attachment(s) (specify): **14-08 Grading Plan**
☒ Summary: **See TEP Findings.**

[1] *Findings must consider any TEP recommendations.*

Attached Project Documents

☒ Site Location Map ☐ Project Plan(s)/Descriptions/Reports (specify):

Appeals of LGU Decisions

If you wish to appeal this decision, you must provide a written request within 30 calendar days of the date you received the notice. All appeals must be submitted to the Board of Water and Soil Resources Executive Director along with a check payable to BWSR for $500 *unless* the LGU has adopted a local appeal process as identified below. The check must be sent by mail and the written request to appeal can be submitted by mail or e-mail. The appeal should include a copy of this notice, name and contact information of appellant(s) and their representatives (if applicable), a statement clarifying the intent to appeal and supporting information as to why the decision is in error. Send to:

Appeals & Regulatory Compliance Coordinator
Minnesota Board of Water & Soils Resources
520 Lafayette Road North
St. Paul, MN 55155
travis.germundson@state.mn.us

Does the LGU have a local appeal process applicable to this decision?

☐ Yes[1] ☒ No

[1]*If yes, all appeals must first be considered via the local appeals process.*

Local Appeals Submittal Requirements (LGU must describe how to appeal, submittal requirements, fees, etc. as applicable)

Notice Distribution (include name)

Required on all notices:

☒ SWCD TEP Member: **Alexis Lipstein (Ramsey County)** ☒ BWSR TEP Member: **Ben Meyer**
☐ LGU TEP Member (if different than LGU contact):
☒ DNR Representative: **Dan Scollan**
☒ Watershed District or Watershed Mgmt. Org.: **Kendra Kloth/Mary Fitzgerald (RWMWD)**
☒ Applicant (notice only): ☒ Agent/Consultant (notice only):

Optional or As Applicable:

☒ Corps of Engineers:
☐ BWSR Wetland Mitigation Coordinator (required for bank plan applications only):
☐ Members of the Public (notice only): ☐ Other:

Signature: Nicole Maras	**Date:** 11/12/2024

This notice and accompanying application materials may be sent electronically or by mail. The LGU may opt to send a summary of the application to members of the public upon request per 8420.0255, Subp. 3.

Stewardship Grant Application Summary

Project Name: Stephens **Application Number:** 25-07 CS

Board Meeting Date: 3/5/2025

Applicant Name: Fred Stephens

Residential ☑ **Commercial/Government** ☐

Project Overview:

This project is located off Cherry Hill Lane and Labore Road in the City of Little Canada. The applicant is proposing to install a native planting and two rain gardens.

The native habitat restoration and rain gardens are eligible for 50% and 75% coverage respectively, up to a total of $15,000.

BMP type(s):

Native Habitat Restoration(1), Rain Garden(2)

Grant Request:

$14,400.00

Recommendation:

Staff recommends approval of this application.

Subwatershed:

Kohlman Lake

Location Maps:

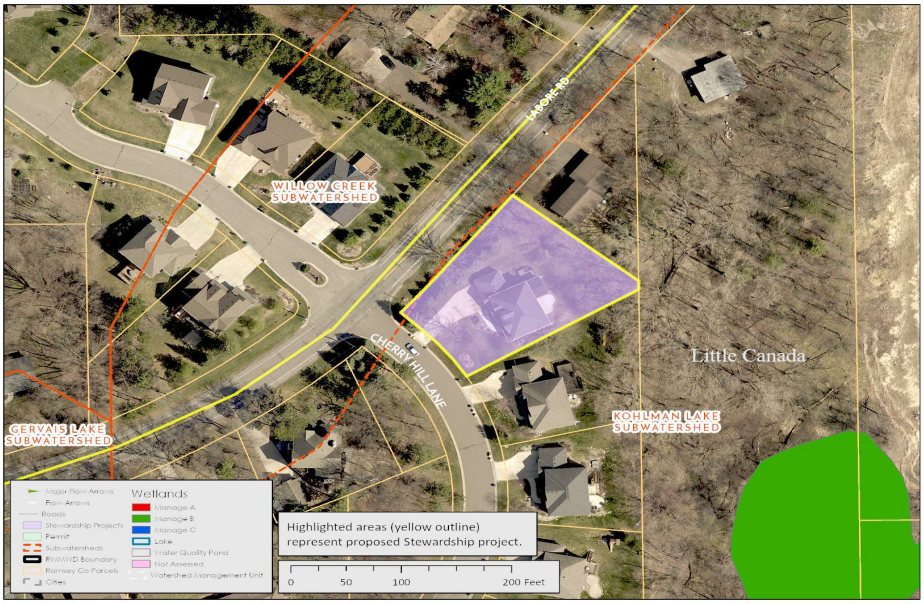

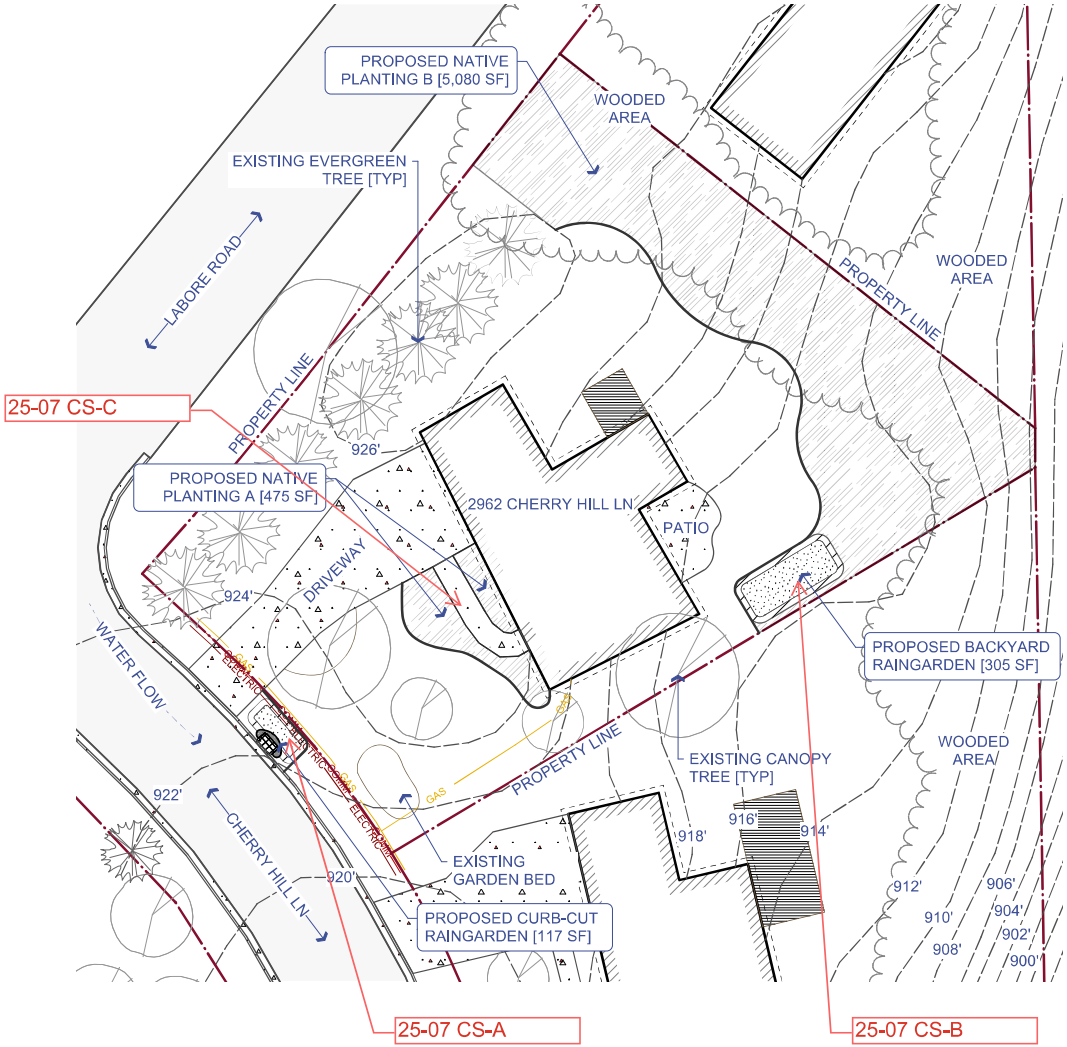

GENERAL NOTES:

1. EXACT LOCATION/SIZE/SHAPE OF PLANTING AREA MAY VARY. MAINTAIN APPROXIMATE SQUARE FEET SIZE, VERIFY FINAL LAYOUT WITH LANDOWNER PRIOR TO HERBICIDE APPLICATION AND PROJECT INSTALLATION.
2. UTILITY LOCATIONS ARE APPROXIAMTE, CONTRACTOR TO VERIFY LOCATES AND POTHOLE ANY LINES WITHIN OR DIRECTLY NEXT TO PROPOSED PROJECTS PRIOR TO BEGINNING WORK.
3. SEE SHEET L200 FOR DETAILED PLANS & NOTES FOR CURB-CUT RAINGARDEN & BACKYARD RAINGARDEN. [RAINGARDEN PLANTINGS PROVIDED ON SHEET L300]
4. SEE NOTES BELOW ON THIS SHEET [L100] FOR NATIVE PLANTING INSTALLATION SPECIFICATIONS. [NATIVE PLANTING SUGGESTED SPECIES AND SPECS PROVIDED ON SHEET L400]
5. CONTRACTOR TO BE RESPONSIBLE FOR ACQUIRING ANY NECESSARY PERMITS PRIOR TO BEGINNING WORK.
6. CONTRACTOR RESPONSIBLE FOR ANY REQUIRED TEMPORARY EROSION CONTROL ONSITE DURING SOIL DISTURBANCE PERIODS.
7. ALL TREES TO BE PROTECTED ONSITE UNLESS OTHERWISE NOTED BY LANDOWNER. NO STORAGE OF MATERIALS OR EQUIPMENT UNDER CANOPY TREES.
8. ELEVATIONS ARE APPROXIMATE. EXACT ELEVATIONS MAY VARY DEPENDING ON EXISTING SITE AND FINAL GRADE OF RAINGARDENS.

NATIVE PLANTING NOTES:

1. REMOVE EXISTING TURF GRASS AND/OR OTHER PERENNAIL VEGETATION IN PROJECT AREA. HERBICIDE APPLICATION [2 MINIMUM]. EXISTING SHRUBS WITHIN PROJECT AREAS TO BE REMOVED AT DISCRETION OF LANDOWNER. CONTRACTOR VERIFY SHRUB REMOVALS WITH LANDOWNER PRIOR TO BEGINNING WORK.
NOTES FOR NATIVE PLANTING A:
2. DEAD TURF GRASS CAN REMAIN IN PLACE FOR EROSION CONTROL PURPOSES. FOR NATIVE PLANTING B, MOW & RAKE PLANTING AREA PRIOR TO SEED INSTALL TO HELP ENSURE SEED TO SOIL CONTACT.
3. FOR NATIVE PLANTING B, SEED ENTIRE PLANTING AREA WITH "TALLGRASS WOODS EDGE OR SAVANNA" SEED MIX FROM PRAIRIE MOON OR SIMILAR. FOLLOW SUPPLIERINSTRUCTIONS ON INSTALLATION.
4. FOR NATIVE PLANTINGS A & B, INSTALL NATIVE PLANTS THROUGHOUT PLANTING AREA. USE SPECIES AND QUANTITIES SPECIFIED ON SHEET L400.
5. NATIVE PLANTING B TO HAVE BIODEGRADABLE NETTING EROSION CONTROL FABRIC INSTALLED OVER ALL SEEDED AREAS AND SECURED PER MANUFACTURERS SPECIFICATION. [C125BN/S75BN OR EQUIVALENT]
6. NATIVE PLANTING A TO BE COVERED IN 2-3" THICK TWICE SHREDDED HARDWOOD MULCH.
7. INSTALL PERENNIALS FOR BOTH PLANTING AREAS AT 24" SPACING IN GROUPS OF LIKE SPECIES FOR EASY IDENTIFICATION AND WEEDING. INSTALL IN GROUPS OF 6-24 COUNT OF SAME SPECIES.
8. INSTALL NATIVE SHRUBS AT 34-48" ON CENTER IN GROUPS OF SAME SPECIES. VERIFY SHRUB SELECTION & LAYOUT WITH LANDOWNER PRIOR TO INSTALL.
9. FINAL SPECIES LIST INCLUDING SPECIES, SIZING, AND QUANTITY TO BE PROVIDED TO RCSWCD STAFF PRIOR TO PURCHASE AND INSTALLATION FOR APPROVAL.
10. INSTALL SHOVEL EDGE AT BOUNDRY OF NATIVE PLANTING AREAS BETWEEN PROPOSED PLANTINGS & EXISTING TURF.
11. RESTORE ANY DAMAGE TO LANDSCAPE/TURF GRASS OUTSIDE OF PROJECT AREA WITH SEED OR SOD.

RAMSEY COUNTY

RAMSEY COUNTY SWCD
2015 VAN DYKE STREET
MAPLEWOOD, MN 55109
651-266-7280
www.ramseycounty.us

PROJECT:
STEPHENS RESIDENCE
LOCATION:
2962 CHERRY HILL LN
LITTLE CANADA, MN 55109
WATERSHED DISTRICT:
RAMSEY-WASHINGTON METRO WATERSHED DISTRICT

DESIGNER: BRIAN T. OLSEN
DATE: 10/23/2024
PAST REVISION:
PAST REVISION:
PAST REVISION:
PAST REVISION:
CHECKED BY:
TAA:

NOTES:
-CONTACT GOPHER STATE ONE CALL TO CONFIRM UTILITY LOCATIONS
-ELEVATIONS ARE APPROXIMATE, SITE VERIFY
-NO CONSTRUCTION MATERIALS SHALL BE STORED UNDER TREE CANOPIES
-EXCAVATE WITH TRACKED EQUIPMENT ONLY
-VERIFY ANY BID ALTERNATES OR ONSITE CHANGES WITH SWCD STAFF PRIOR TO INSTALLATION
-ORIGINAL SHEET SIZE: 11"x17"

SCALE: 1"=30'-0"

N

SITE PLAN

L100

Consent Agenda Action Item

Board Meeting Date: March 5, 2025 **Agenda Item No:** 3F

Preparer: Tina Carstens, Administrator

Item Description: Change Order No. 1 for the 2025 Capital Improvement Project (CIP)

Background:

Change order 1 for the 2025 Capital Improvement Project, Woodbury Ponds, overflow structure replacement is attached. This change order includes removing and properly disposing of a total of two (2) existing overflow structures at Site 13 and replacing each with the City of Woodbury standard overflow structure with trash guard. This change order will increase the contract price by $25,000.

Applicable District Goal and Action Item:

Goal: Achieve quality surface water – The District will maintain or improve surface water quality to support healthy ecosystems and provide the public with a wide range of water-based benefits.

Action Item: Implement retrofit water quality improvement projects.

Staff Recommendation:
Approve Change Order No. 1.

Financial Implications:
This change order will increase the contract price by $25,000.

Board Action Requested:
Approve Change Order No. 1.

Change Order No. 1
Ramsey-Washington Metro Watershed District
2025 Capital Improvement Project (CIP)

DATE OF ISSUANCE: February 20, 2025

Owner: Ramsey-Washington Metro Watershed District
2665 Noel Drive
Little Canada, MN 55117
Attn: Val Eisele, President

Contractor: Fitzgerald Excavating & Trucking, Inc.
21432 350th Street
Goodhue, MN 55027
Attn: Jason Fitzgerald, President

Engineer: Barr Engineering Company
4300 MarketPointe Drive, Suite 200
Minneapolis, MN 55435
Attn: Brad Lindaman, Project Engineer

C.O.1.A Woodbury Ponds – Overflow Structure Replacement

Description of Change:

Remove and properly dispose of a total of two (2) existing pond overflow structures at Site 13. Replace each with the City of Woodbury standard overflow structure with trash guard, plate no. STO-40 as shown in detail in Figure 3, Detail 1 – "Overflow Structure with Trash Guard".

Measurement and Payment

1. The Work will be measured per each (EA)Overflow Structure with Trash Guard, furnished and installed, complete as specified and shown in the attached drawing figures.

2. Contractor will be paid based on each (EA) Overflow Structure with Trash Guard furnished and installed, complete as specified. This unit shall be payment in full for all costs of all supervision, labor, materials, equipment, profile and overhead, and performing all operations as are necessary to complete all work as specified, including submittal of shop drawings for review and acceptance prior to fabrication and delivery, removal and disposal of existing structures and trash racks, careful disconnection of existing storm pipes for reconnection to new overflow structure with trash guard per plate no. STO-40, dewatering, control of water, repairs to existing storm pipes as directed, providing a watertight seal to pipe and structure in the mortar formed connection, furnishing and installing complete overflow structure with trash guard and all appurtances and pipe bedding material, backfilling, compaction, removing and replacing of riprap and filter around structure, disposal of excess materials off-site, and all other appurtenances, ALL COMPLETE, as shown in the drawing figures attached and as specified and directed.

Change in Contract Time:

None

Impact on Contract Price:

The cost to perform the additional work requested by the City of Woodbury will be $25,000.

Attachments:

- Contractor's Quote
- Drawing Figures

This Change Order No. 1 is:

Submitted By: _____ Date: February 20, 2025
(ENGINEER) Bradley J. Lindaman, Project Engineer
Barr Engineering Company

Authorized By: _____ Date: _____
(OWNER) Val Eisele, President
Ramsey-Washington Metro Watershed District

Approved By: _____ Date: 2-29-25
(CONTRACTOR) Jason Fitzgerald, President
Fitzgerald Excavating & Trucking, Inc.

Gareth W. Becker

From: Gareth W. Becker <GBecker@barr.com>
Sent: Thursday, February 6, 2025 1:08 PM
To: Jason Fitzgerald - Fitzgerald Excavating & Trucking, Inc. (fitzexcavating@gmail.com); Nick
Cc: David Vlasin; Brad Lindaman; Seaman, Kristin
Subject: FW: SC 220 extra pipe work

Caution: This email originated outside our organization; please use caution.

Jason,

Please proceed with verifying the elevations and procuring/installing these structures. This will be added to contract as a change order (to be reimbursed by the City of Woodbury) for the next board meeting.

Thanks all!

Gareth W. Becker
He/him/his

Senior Civil Specialist
Staffing Coordinator Associate
Minneapolis, MN office: 952.842.3580
GBecker@barr.com
www.barr.com

resourceful. naturally. BARR

If you no longer wish to receive marketing e-mails from Barr, respond to communications@barr.com and we will be happy to honor your request.

From: Seaman, Kristin <kristin.seaman@woodburymn.gov>
Sent: Thursday, February 6, 2025 1:04 PM
To: David Vlasin <david.vlasin@rwmwd.org>
Cc: Gareth W. Becker <GBecker@barr.com>; Keller, Teresa <teresa.keller@woodburymn.gov>
Subject: RE: SC 220 extra pipe work

CAUTION: This email originated from outside of your organization.

The shop drawings are approved by the City as long as it is verified onsite that the rim elevations match existing in the field. Thank you,

Kristin Seaman
Environmental Resources Coordinator, she/her
8301 Valley Creek Rd | Woodbury, MN 55125

(651) 714-3593 | www.woodburymn.gov

From: David Vlasin <david.vlasin@rwmwd.org>
Sent: Wednesday, February 5, 2025 1:30 PM
To: Seaman, Kristin <kristin.seaman@woodburymn.gov>
Cc: David Vlasin <david.vlasin@rwmwd.org>; Gareth W. Becker <GBecker@barr.com>; Keller, Teresa <teresa.keller@woodburymn.gov>
Subject: FW: SC 220 extra pipe work

CAUTION: External Message.

Per voice mail – Can you/City staff please review the attached and confirm shop drawings are good.

Thanks!
Dave

Dave Vlasin | Watershed Project Coordinator
Ramsey-Washington Metro Watershed District
2665 Noel Drive | Little Canada, MN | 55117
O- 651-792-7970 | C- 612-810-5885 | www.rwmwd.org

From: Nick Dahle <nick@fitzexcavating.com>
Sent: Wednesday, February 5, 2025 8:56 AM
To: David Vlasin <david.vlasin@rwmwd.org>
Cc: Gareth W. Becker <GBecker@barr.com>; Jason Fitzgerald <fitz8477@gmail.com>
Subject: RE: SC 220 extra pipe work

Caution: This email originated outside our organization; please use caution.

Dave & Gareth,

Can you take a look at these shops for the added structures?

Thanks,
Nick Dahle
21432 350th St. | Goodhue, MN 55027
Office 651.923.4060 | Cell 507.676.6615
Email Nick@fitzexcavating.com
Fitzgerald Excavating & Trucking Inc.

From: David Vlasin <david.vlasin@rwmwd.org>
Sent: Tuesday, January 28, 2025 9:01 AM
To: Nick Dahle <nick@fitzexcavating.com>
Cc: Gareth W. Becker <GBecker@barr.com>; Jason Fitzgerald <fitz8477@gmail.com>; David Vlasin <david.vlasin@rwmwd.org>
Subject: RE: SC 220 extra pipe work

Thank you! – I have sent to the City of Woodbury to see if they would like to proceed with install. My initial reaction was this price seems a little high, but we will let the City decide on the direction they would like to go.

More to come after I hear from City. ...

Thank you!
Dave

From: Nick Dahle <nick@fitzexcavating.com>
Sent: Tuesday, January 28, 2025 8:34 AM
To: David Vlasin <david.vlasin@rwmwd.org>
Cc: Gareth W. Becker <GBecker@barr.com>; Jason Fitzgerald <fitz8477@gmail.com>
Subject: RE: SC 220 extra pipe work

Caution: This email originated outside our organization; please use caution.

Dave,

We will furnish and complete the extra pipe work on Pond SC220 for $25,000.

This price includes the Mobilization, Structures, and Skimmer Grates per the plans provided.

If approved, please let me know and I will have the shop drawings processed.

Thanks,
Nick Dahle
21432 350th St. | Goodhue, MN 55027
Office 651.923.4060 | Cell 507.676.6615
Email Nick@fitzexcavating.com
Fitzgerald Excavating & Trucking Inc.

From: David Vlasin <david.vlasin@rwmwd.org>
Sent: Tuesday, January 28, 2025 7:40 AM
To: Nick Dahle <nick@fitzexcavating.com>; 'Jason Fitzgerald - Fitzgerald Excavating & Trucking, Inc. (fitzexcavating@gmail.com)' <fitzexcavating@gmail.com>
Cc: David Vlasin <david.vlasin@rwmwd.org>; Gareth W. Becker <GBecker@barr.com>
Subject: SC 220 extra pipe work

Nick/Jason,
Can we please get a price for the extra pipe work for the Woodbury Pond SC220?

Dave

Dave Vlasin | Watershed Project Coordinator
Ramsey-Washington Metro Watershed District
2665 Noel Drive | Little Canada, MN | 55117
O- 651-792-7970 | C- 612-810-5885 | www.rwmwd.org

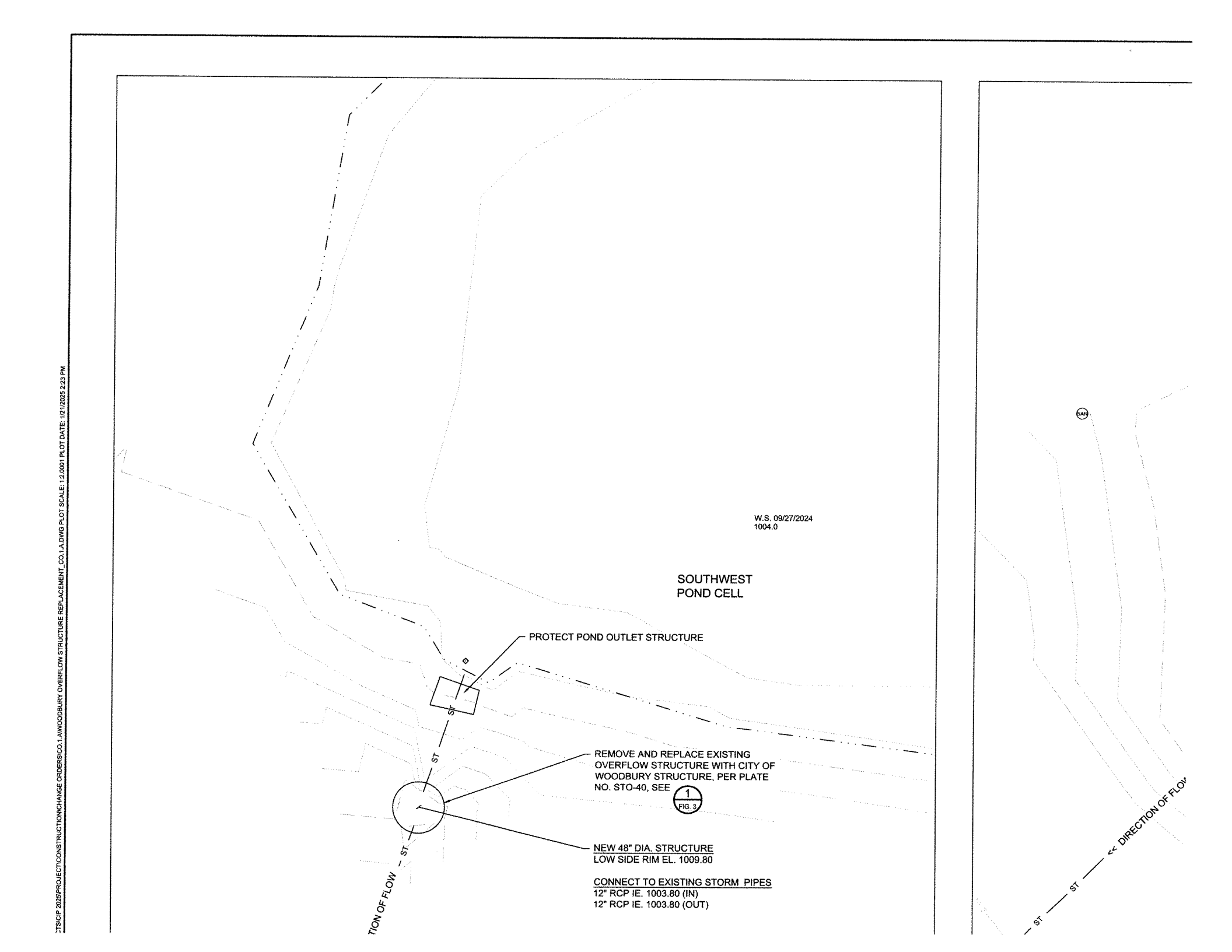

CTS\CIP 2025\PROJECT\CONSTRUCTION\CHANGE ORDERS\CO.1.A\WOODBURY OVERFLOW STRUCTURE REPLACEMENT_CO.1.A.DWG PLOT SCALE: 1:2.0001 PLOT DATE: 1/21/2025 2:23 PM

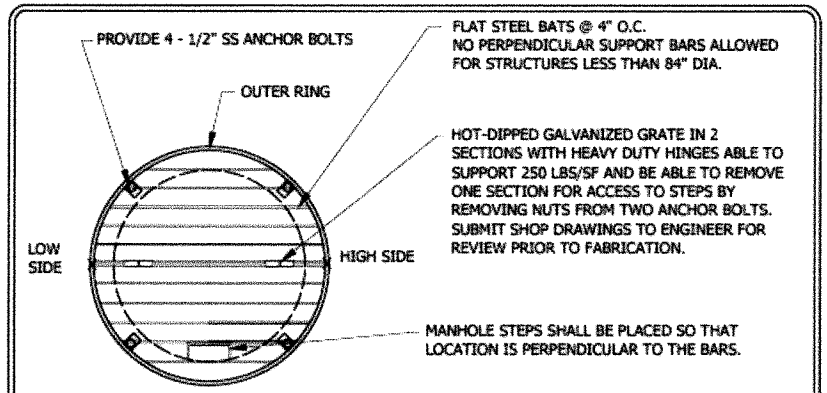

GRATE DETAIL

D = 12"

DIAMETER	TOP OF STRUCTURE SLOPE (D)
48" DIA.	~~9"~~, 12", ~~OR 18"~~
~~> 48" DIA.~~	~~12" OR 24"~~

SEE STORM SEWER SCHEDULE FOR SPECIFIC STRUCTURE.

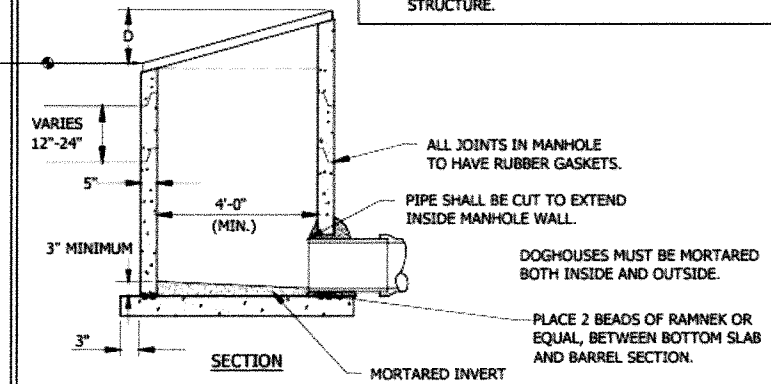

SECTION

Woodbury

OVERFLOW STRUCTURE
WITH TRASH GUARD

LAST REVISION:
November 2019

PLATE NO.
STO-40

T:\CIP 2025\PROJECT\CONSTRUCTION\CHANGE ORDERS\CO.1.A\WOODBURY OVERFLOW STRUCTURE REPLACEMENT_CO.1.A.DWG PLOT SCALE: 1:2.0002 PLOT DATE: 1/21/2025 2:28 PM

Oldcastle Infrastructure™
A CRH COMPANY
P.O. Box 451
2020 Country Road 29 507.263.3935 Phone
Cannon Falls, MN 55009 507.263.3937 Fax
Hancock Concrete Products, LLC

Job Number:	**25-1333**
Contractor:	Fitzgerald Excavating
Job Name:	RWMWD CIPS Change Order 1 Structure Replacement
Location:	Woodbury, MN
Contact:	Nick Dahle
Phone:	(651) 923-4060
Email:	nick@fitzexcavating.com

Table of Contents

Structure - Specification	**Page**
SS-2 - 48" Flat Top/No Cover	1
SS-4 - 48" Flat Top/No Cover	2

Oldcastle Infrastructure™
A CRH COMPANY
P.O. Box 451
2020 Country Road 29
Cannon Falls, MN 55009
507.263.3935 Phone
507.263.3937 Fax
Hancock Concrete Products, LLC

Job Number: 25-1333
Structure: SS-2
Contractor: Fitzgerald Excavating
Job Name: RWMWD CIPS Change Order 1 Structure Replacement
Job Location: Woodbury, MN
Specification: 48" Flat Top/No Cover

Take Off By: 2/5/2025 JLM

Design Build Height

Top of Casting	+	1,010.80'
Outlet Invert	-	1,003.80'
Design Height	=	**7.00'**

Stack Build Height

Last Riser Gain	+	7.00'
Design Height	=	**7.00'**
To Floor	+	0.25'
Floor Thickness	+	0.50'
Outside Height	=	**7.75'**

Grate: 48" MH - 12" Pond Skimmer Slope
Grate/Cover:
Channel: No Channel
Joint Seals: 48" Mastic
Step Degree: None
Notes:

Openings

ID	Invert	Pipe Size	Pipe OD	Hole Size	Connector	Angle
#1	1003.80'	12" RCP C	18"	22" Ø	DogHouse Pipe On Bottom	0°
#2	1003.80'	12" RCP C	18"	22" Ø	DogHouse Pipe On Bottom	180°

Elevation (View A-A)

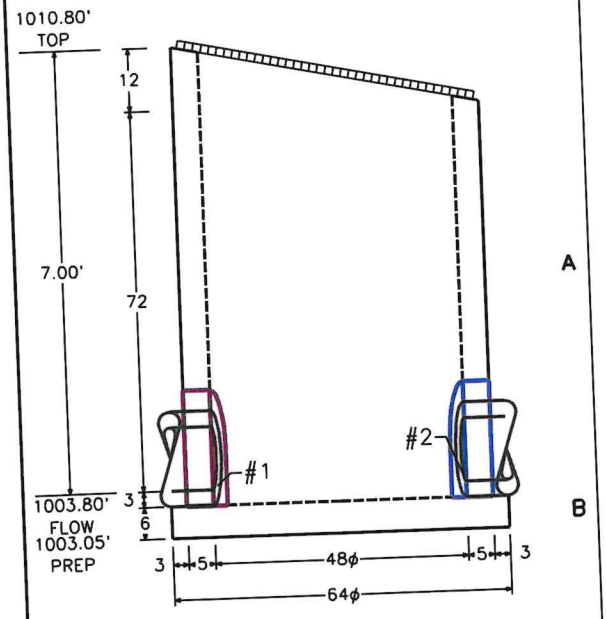

Plan View

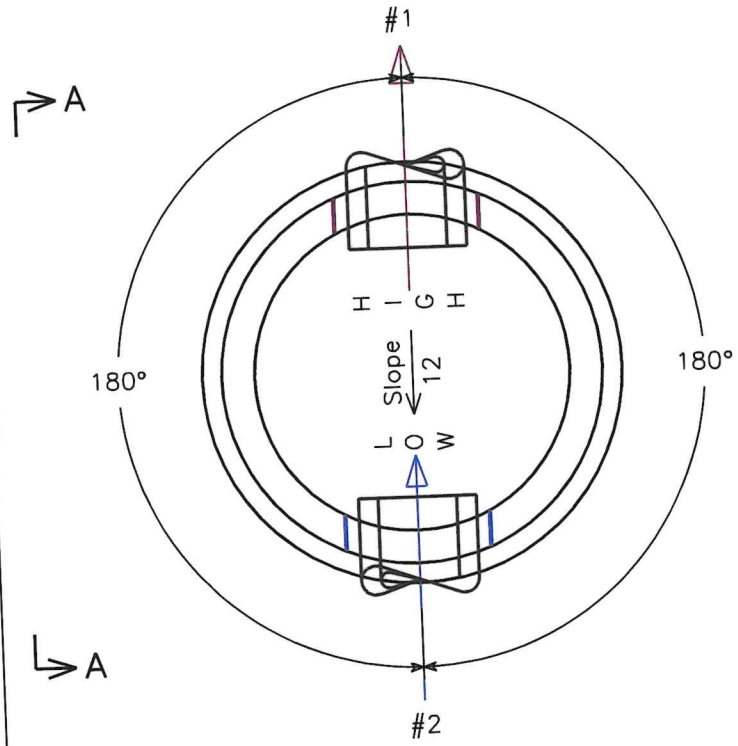

BOM For Stack

ID	Part Number	Qty.	Weight
A	M048R7.25	1	5,442
B	M048B06406	1	1,654
	Totals (precast, lbs.)	2	7,095

Oldcastle Infrastructure™
A CRH COMPANY
P.O. Box 451
2020 Country Road 29
Cannon Falls, MN 55009
507.263.3935 Phone
507.263.3937 Fax
Hancock Concrete Products, LLC

Take Off By: 2/5/2025 JLM

Job Number:	**25-1333**
Structure:	**SS-4**
Contractor:	Fitzgerald Excavating
Job Name:	RWMWD CIPS Change Order 1 Structure Replacement
Job Location:	Woodbury, MN
Specification:	48" Flat Top/No Cover

Design Build Height

Top of Casting	+	1,009.80'
Outlet Invert	-	1,004.90'
Design Height	=	**4.90'**

Stack Build Height

Last Riser Gain	+	4.90'
Design Height	=	**4.90'**
To Floor	+	0.35'
Floor Thickness	+	0.50'
Outside Height	=	**5.75'**

Grate:	48" MH - 12" Pond Skimmer Slope
Grate/Cover:	
Channel:	No Channel
Joint Seals:	48" Mastic
Step Degree:	None
Notes:	

Openings

ID	Invert	Pipe Size	Pipe OD	Hole Size	Connector	Angle
#1	1004.90'	30" RCP C	38.5"	42" Ø	DogHouse Pipe On Bottom	0°
#2	1004.90'	12" RCP C	18"	22" Øx23"H	DogHouse Pipe On Bottom	200°

Elevation (View A-A)

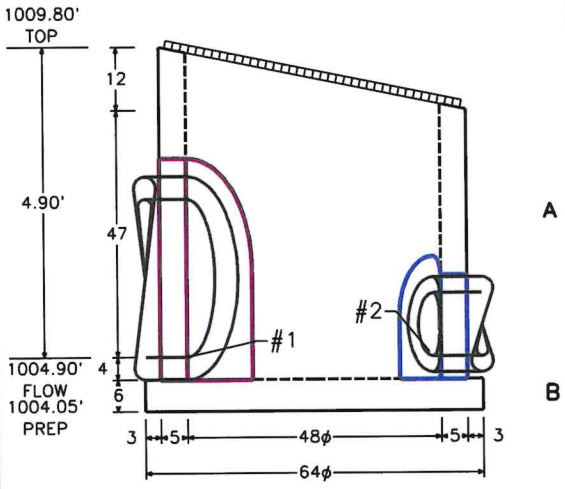

Plan View

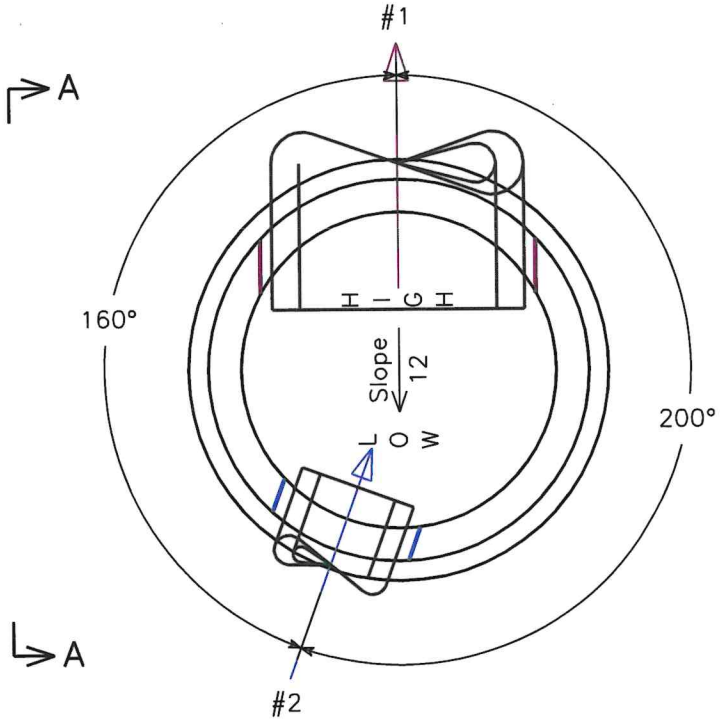

BOM For Stack

ID	Part Number	Qty.	Weight
A	M048R5.25	1	3,205
B	M048B06406	1	1,654
	Totals (precast, lbs.)	2	4,858

****

Permit Program

****

Permit Application Coversheet

Date March 05, 2025

Project Name Ramsey County Bruce Vento Trail Extension Project Number 25-05

Applicant Name Scott Yonke, Ramsey County Parks & Recreation

Type of Development Trail

Property Description

This project is located east of Highway 61, from Buerkle Road to Highway 96 E in the cities of White Bear Lake and White Bear Township. Approximately 2/3rds of the proposed trail corridor is located in the Vadnais Lake Area Water Management Organization (VLAWMO). This permit request is for the RWMWD portion of the project only and includes bituminous trail construction with some bridge sections, select curb and gutter/catch basin replacement, and roadway reconstruction. The total disturbed area in RWMWD is approximately 3.7 acres. Three underground infiltration facilities are proposed to meet stormwater treatment requirements. This project involves fill within the 100-year floodplain of a wetland onsite, and compensatory storage is being provided such that there is no net loss of flood storage on the landscape. Due to spatial and design constraints, 0.02 acre (715 SF) of wetland is proposed to be permanently impacted. A Wetland Conservation Act (WCA) wetland replacement plan was conditionally approved at the December 2024 RWMWD board meeting with a Notice of Decision (NOD) issued in January 2025 (#24-32 WCA). Wetland bank credits at a 2:1 ratio have been purchased by the applicant to meet replacement requirements. A wetland buffer variance request has been submitted to accommodate the trail construction. Any temporarily disturbed areas will be restored with a native seed mix.

Watershed District Policies or Standards Involved:

- ☑ *Wetlands*
- ☑ *Erosion and Sediment Control*
- ☑ *Stormwater Management*
- ☑ *Floodplain*

Water Quantity Considerations

The proposed stormwater management plan is sufficient to handle the runoff from the site, and proposed grading for compensatory storage is sufficient to maintain flood storage on the landscape.

Water Quality Considerations

Short Term

The proposed erosion and sediment control plan is sufficient to protect downstream water resources during construction.

Long Term

The proposed stormwater management plan is sufficient to protect the long term quality of downstream water resources.

Staff Recommendation

Staff recommends approval of this permit with the special provisions and variance request (Rule E).

Attachments:

- [x] Project Location Map
- [ ] Project Grading Plan

#25-05 Ramsey County Bruce Vento Trail Extension

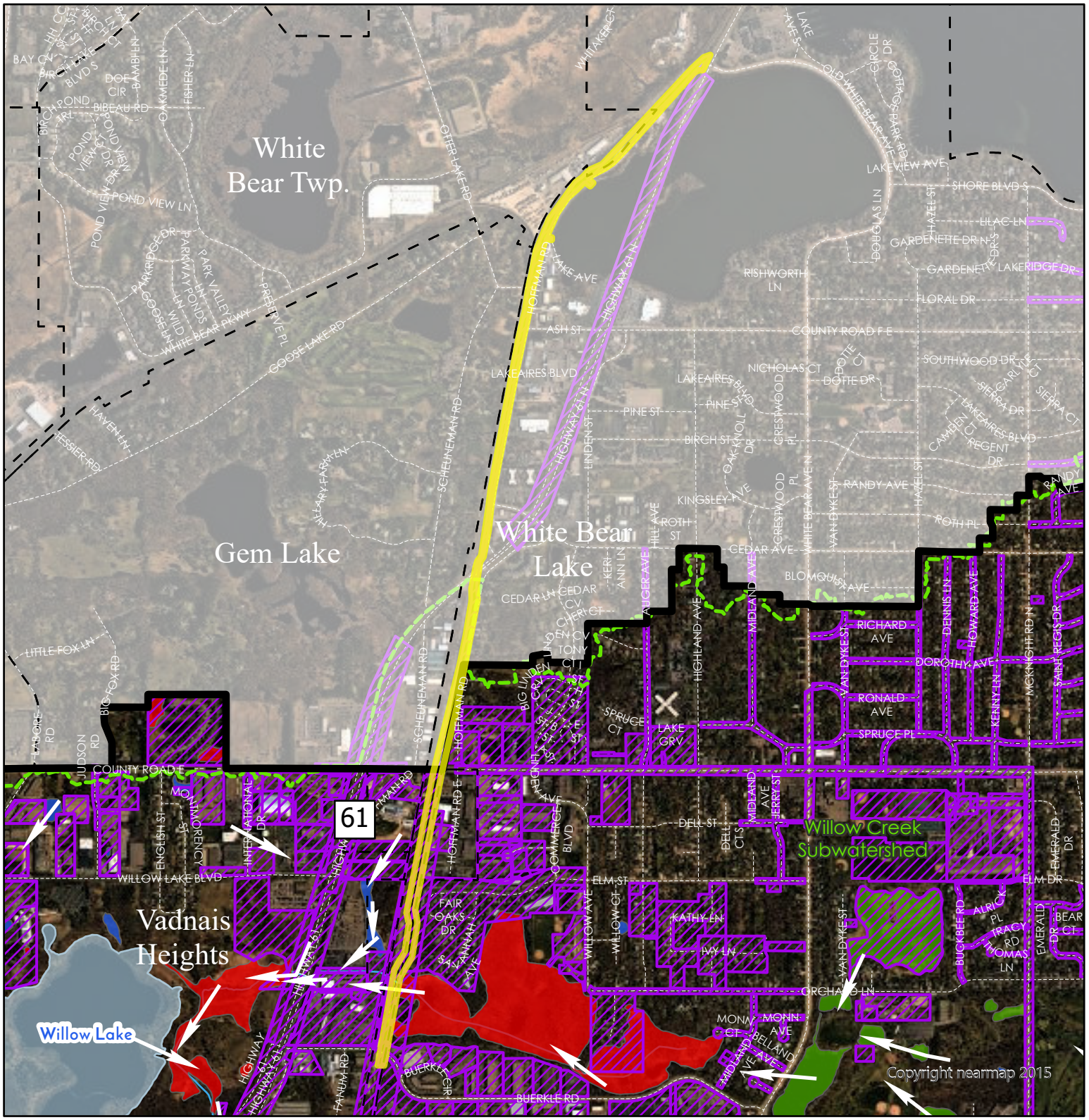

Wetlands
- Manage A
- Manage B
- Manage C
- Lake
- Sediment Pond
- Not Assessed

- Flow Arrows
- Roads
- Permits
- Cities
- Subwatersheds
- Lakes
- RWMWD Boundary

Shaded area is outside RWMWD

Highlighted Areas Represent Active Permit

Miles
0 0.28 0.55

US Feet
0 1,250 2,500

N

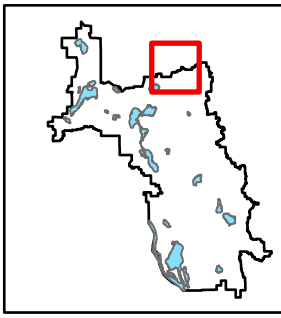

25-05

Special Provisions

1. The applicant shall submit additional geotechnical information within the footprint of the proposed infiltration facilities.

2. The applicant shall submit the final, signed plans set.

3. The applicant shall submit contact information for the trained and certified erosion control coordinator responsible for implementing the Stormwater Pollution Prevention Plan (SWPPP).

4. The applicant shall submit a copy of the approved Minnesota Pollution Control Agency's NPDES Construction Permit coverage for the project.

RWMWD Wetland Buffer Variance Request

Date: February 20, 2025

To: Scott Yonke, PLA
Ramsey County Parks and Recreation Department
2015 Van Dyke Street
Maplewood, MN 55109-3796

From: Greg Brown, PE
Helena Beikircher, PE
Kimley-Horn and Associates, Inc.

Subject: Request for Variance to Wetland Buffer Rule

Summary

RWMWD provided comments related to the Bruce Vento Trail watershed permit submittal in an email dated Monday, February 17, 2025. Comment 6 stated:

6. Submit a wetland buffer variance request (RWMWD Rule E) in the form of a stand-alone memo with accompanying figure if District no-disturb buffer widths cannot be met (37.5' minimum, 75' average). Memo should describe the need/purpose for impacts, as well as the duration of impacts (temporary versus permanent) and restoration planned for temporarily disturbed areas.

The wetland area subject to this request is the Manage A wetland area in drainage area NB18-12 of the RWMWD Watershed Management Plan Figure 2.1-6 and as shown on Sheet 48 of the construction plans. The wetland area was identified as Wetland C in the Joint Wetland Permit Application.

Governing Rules

Ramsey Washington Metro Watershed District

Rule E. Wetland Management
Section 3.d. specifies that no-disturb buffers are required as listed in Table 3 of the rule. As stated in the comment above, this requires a 75' average buffer and 37.5' minimum buffer for the Manage A wetland.

Rule I. Variances
A variance may be granted by the Board where there are unnecessary hardships by strict compliance with the rule, provided the overall intent of the rule is retained.

Variance Request

Need and Purpose

As shown on sheet 48 of the construction plans, the wetland area is largely east of the proposed trail and bridge alignment, with two areas of the wetland boundary extending below the bridge. As has been discussed with District staff throughout development of this project, the bridges are proposed to avoid and minimize direct wetland impacts. In fact, an earlier version of the plans had only one bridge and proposed fill over a portion of the wetland to minimize costs. The current plans minimize the overall wetland and buffer impacts by bridging over the wetland areas and minimizing the disturbed areas adjacent to the trail and floodplain compensatory storage area during construction.

The extent of areas within the 37.5' and 75' buffer distances are shown in **Figure 1.** As shown, only areas directly adjacent to the bridge structures are within the 37.5' buffer. The majority of the project impacts are outside of the 37.5' wetland buffer.

Due to bridge superstructure depths and required clearances over the 100-year flood stage level, a large amount of fill will be placed within portions of the wetland buffers. Buffer impacts are driven by a combination of fill in the areas approaching both bridges, placement of the direct bridge abutments prior to wetland crossings, and by creation of the floodplain compensatory storage area between the two bridges and just east of the trail. The need for the floodplain compensatory storage area creation was discussed in the original permit application related to Rule D Flood Control.

Related to trail alignment and potential further reduction of buffer impacts, the trail alignment is constrained on the west side by the railroad right-of-way and to the west by larger wetland areas that would result in greater impacts and substantially higher costs to create a trail connection this area.

In short, the ability to create the trail corridor through this area would not be feasible without some temporary and permanent impacts to the wetland and wetland buffer area. The current plan minimizes the combination of direct wetland impacts and adjacent buffer area impacts given the site constraints noted above.

Duration of Impacts

Impacts to the buffer areas will essentially all be temporary as the impacted areas will be seeded and restored with native seeds as shown in the plans and as described in the following section. There will be a small area of permanent impacts in the immediate area surrounding the bridge abutments.

Restoration Plan

As shown in Sheet 95 (EC01) of the plans, the impacted buffer areas will be restored with native seed mix Wet Ditch and stabilized using a category 25 blanket. All disturbed areas will be surrounded by perimeter controls shown as a combination of silt fence and sediment control logs in the plans.

Appendix 1:
Wetland Buffer Exhibit



K:\TWC_Civil\County\RAMSEY\BRUCE VENTO TRAIL\CAD\Plan Sheets\Exhibits\BVT_WetlandBuffer.dwg February 20, 2025 - 5:30pm

Kimley»Horn

FIGURE 1: WETLAND BUFFER IMPACTS
BRUCE VENTO TRAIL 2/20/2025

RAMSEY COUNTY

NORTH

0 15 30
HORIZONTAL SCALE IN FEET

BOARD OF WATER AND SOIL RESOURCES

Minnesota Wetland Conservation Act
Notice of Decision

Local Government Unit: Ramsey-Washington Metro Watershed District (RWMWD) **County:** Ramsey
Applicant Name: Scott Yonke (Ramsey County Parks & Recreation) **Applicant Representative:** Aaron Stolte (Kimley-Horn)
Project Name: Bruce Vento Trail Replacement Plan (Revised) **LGU Project No. (if any):** 24-32 WCA
Date Complete Application Received by LGU: 11/14/2024
Date of LGU Decision: 1/23/25
Date this Notice was Sent: 1/29/25

WCA Decision Type - check all that apply

☐**Wetland Boundary/Type** ☐**Sequencing** ☒**Replacement Plan** ☐**Bank Plan (not credit purchase)** ☐**No-Loss (8420.0415)** ☐**Exemption (8420.0420)** **Part:** ☐ **A** ☐ **B** ☐ **C** ☐ **D** ☐ **E** ☐ **F** ☐ **G** ☐ **H** **Subpart:** ☐ **2** ☐ **3** ☐ **4** ☐ **5** ☐ **6** ☐ **7** ☐ **8** ☐ **9**

Replacement Plan Impacts (replacement plan decisions only)

Total WCA Wetland Impact Area: **0.02 acre (715 square feet)**
Wetland Replacement Type: ☐ Project Specific Credits: ☒ Bank Credits: **0.04 credits**
Bank Account Number(s): **1471**

Technical Evaluation Panel Findings and Recommendations (attach if any)

☒ Approve ☐ Approve w/Conditions ☐ Deny ☐ No TEP Recommendation

TEP members Nicole Maras (RWMWD- LGU), Ben Meyer (BWSR), Alexis Lipstein (Ramsey County), and Dan Scollan (DNR) met virtually on 12/4/24 to discuss the application. A summary of TEP findings and a request for additional information was provided to the RWMWD Board of Managers at their 12/11/24 board meeting. The board conditionally approved the application pending a sufficient response by the applicant to the TEP findings. A memo was subsequently submitted that sufficiently addressed TEP comments on 1/14/25 following a 60-day decision deadline extension notification on 1/13/25.

LGU Decision

☒ Approved with Conditions (specify below)[1] ☐ Approved[1] ☐ Denied

List Conditions: **Submit documentation/confirmation of wetland bank purchase.**

Decision-Maker for this Application: ☒ Staff ☐ Governing Board/Council ☐ Other:

Decision is valid for: ☒ 5 years (default) ☐ Other (specify):

[1] *Wetland Replacement Plan approval is not valid until BWSR confirms the withdrawal of any required wetland bank credits. For project-specific replacement a financial assurance per MN Rule 8420.0522, Subp. 9 and evidence that all required forms have been recorded on the title of the property on which the replacement wetland is located must be provided to the LGU for the approval to be valid.*

LGU Findings – Attach document(s) and/or insert narrative providing the basis for the LGU decision[1].

☒ Attachment(s) (specify): **Response to TEP Comments Memo 1-14-25**
☒ Summary: **See TEP Findings.**

[1] *Findings must consider any TEP recommendations.*

Attached Project Documents

☒ Site Location Map ☐ Project Plan(s)/Descriptions/Reports (specify):

Appeals of LGU Decisions

If you wish to appeal this decision, you must provide a written request within 30 calendar days of the date you received the notice. All appeals must be submitted to the Board of Water and Soil Resources Executive Director along with a check payable to BWSR for $500 *unless* the LGU has adopted a local appeal process as identified below. The check must be sent by mail and the written request to appeal can be submitted by mail or e-mail. The appeal should include a copy of this notice, name and contact information of appellant(s) and their representatives (if applicable), a statement clarifying the intent to appeal and supporting information as to why the decision is in error. Send to:

Appeals & Regulatory Compliance Coordinator
Minnesota Board of Water & Soils Resources
520 Lafayette Road North
St. Paul, MN 55155
travis.germundson@state.mn.us

Does the LGU have a local appeal process applicable to this decision?

☐ Yes[1] ☒ No

[1]*If yes, all appeals must first be considered via the local appeals process.*

Local Appeals Submittal Requirements (LGU must describe how to appeal, submittal requirements, fees, etc. as applicable)

Notice Distribution (include name)

Required on all notices:

☒ SWCD TEP Member: **Alexis Lipstein (Ramsey County)** ☒ BWSR TEP Member: **Ben Meyer**
☒ LGU TEP Member (if different than LGU contact): **Kendra Kloth (RWMWD)**
☒ DNR Representative: **Dan Scollan**
☒ Watershed District or Watershed Mgmt. Org.: **Mary Fitzgerald (RWMWD), Brian Corcoran (VLAWMO)**
☒ Applicant (notice only): **Ben Karp (Ramsey County Parks)** ☒ Agent/Consultant (notice only): **Greg Brown/Susan Mayer/Ron Leaf (Kimley-Horn)**

Optional or As Applicable:

☒ Corps of Engineers: **Tom Hayek**
☐ BWSR Wetland Mitigation Coordinator (required for bank plan applications only):
☐ Members of the Public (notice only): ☐ Other:

Signature: Nicole Maras	**Date:** 1/29/25

This notice and accompanying application materials may be sent electronically or by mail. The LGU may opt to send a summary of the application to members of the public upon request per 8420.0255, Subp. 3.

MEMORANDUM

To:	Nicole Maras, *Ramsey-Washington Metro Watershed District*
From:	Susan Mayer, *Kimley-Horn and Associates, Inc.* Greg Brown, *Kimley-Horn and Associates, Inc.*
Date:	January 14, 2025
Subject:	Bruce Vento Regional Trail – Wetland Replacement Plan Technical Evaluation Panel Comment Responses

INTRODUCTION

On behalf of Ramsey County Parks & Recreation, Kimley-Horn submitted a wetland replacement plan to Ramsey-Washington Metro Watershed District (RWMWD) on November 14, 2024. A Technical Evaluation Panel (TEP) was held on December 4, 2024 with staff from RWMWD, the Department of Natural Resources (DNR), the Board of Water and Soil Resources (BWSR), and Ramsey County. The TEP requested additional information to aid in review of the wetland replacement plan; each comment which warranted a response is discussed below.

TEP COMMENTS AND RESPONSES

1. *TEP Comment: Sheet 39 of the construction plans shows an area labeled wetland and floodplain mitigation, so it's unclear to what extent onsite project-specific mitigation was considered (or ruled out). Remove the wetland mitigation label if not proposing onsite replacement.*
    a. Response: The wetland mitigation label was included in error. A revised copy of CP01 (sheet 39, now numbered sheet 52) is provided in **Attachment A**.
2. *TEP Comment: It appears the trail varies between 12-14' width. How was the minimum width determined, and is there opportunity to narrow the trail in the area of Wetland C to avoid impacts altogether? Include in alternatives discussion.*
    a. Response: The trail width of 12-14 feet is the standard width utilized for the Bruce Vento Trail segments that exist to the south. The width provides space for walkers and bikers as well as convenience for maintenance operations. The areas noted with 14-feet pavement are locations where the 2-foot clear zone is paved.
3. *TEP Comment: Property ownership is often an important consideration for project-specific mitigation because achieving success involves long-term access, maintenance, and monitoring. In the vicinity of Wetland C, the plan sheets show some parcels labeled as being owned by Met Council and the City of White Bear Lake. Would project-specific mitigation require easements, and who would be responsible for implementation?*

a. Response: The County has obtained an easement from the Metropolitan Council and an agreement with White Bear Lake for construction of the trail extension. Project-specific mitigation would require additional easements and revision of the agreement with the City of White Bear Lake. As noted in the 2009 St. Paul District USACE Mitigation policy, approved mitigation banking sites are larger tracts which are typically more ecologically diverse and resilient than project-specific mitigation. The USACE states that the use of mitigation banks reduces risk, uncertainty, and temporal losses of wetland functions. The linear footprint of the project area, with BNSF railroad running parallel/adjacent to the west, introduces a challenge for siting constructed wetland mitigation area, as the width of the corridor limits location selection and implementation. There are 0.02 acre of wetland fill proposed in the wetland permit application; completed at a ratio of 2:1, an onsite mitigation project would only be 0.04 acre in size. The USACE states that larger mitigation sites typically have higher success rates than smaller mitigation sites due to the long-term planning, financial stakeholders, and the ecological diversity which make them more resilient. Based on the urbanized and linear nature of the project area, as well as the small size of wetland to be replaced, an onsite mitigation project has a lower likelihood of long-term success than the purchase of credits at an established bank.

4. *TEP Comment: Request that the applicant submit bridge abutment construction detail(s).*

   a. Response: Please see bridge abutment construction details provided in **Attachment B**.

Attachment A

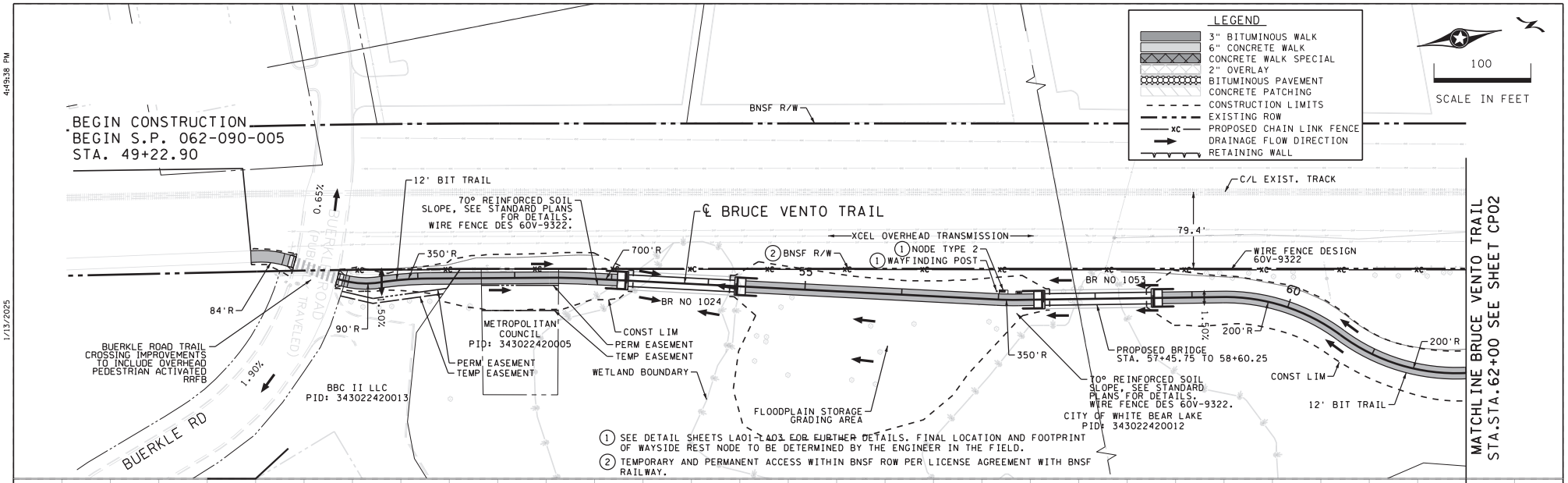

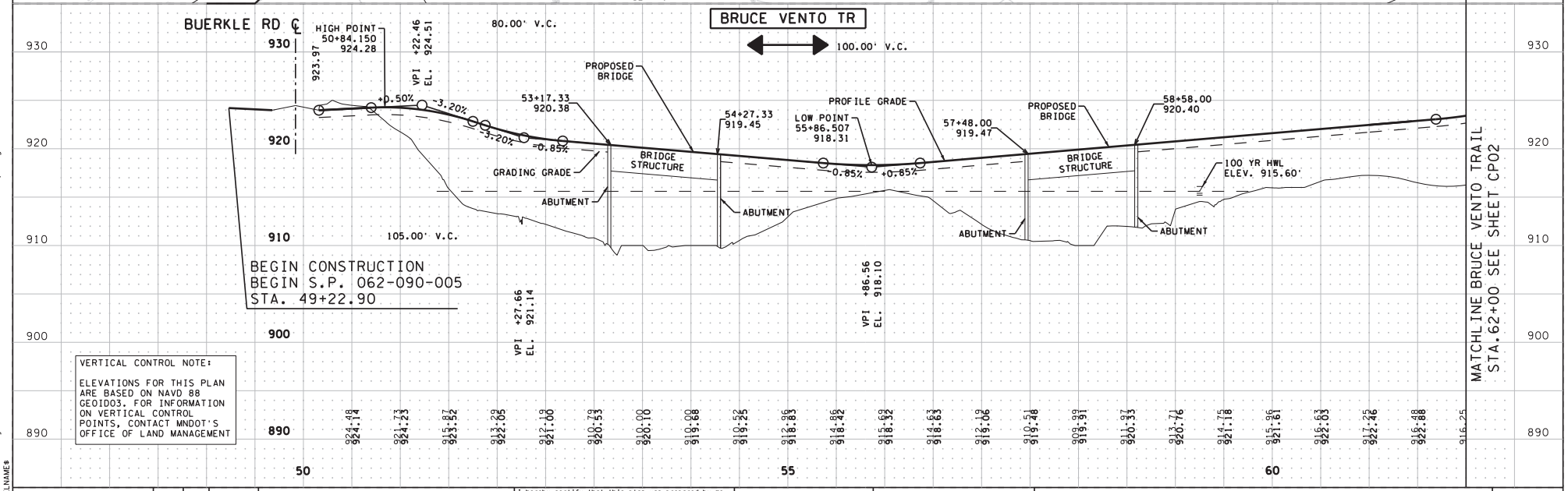

VERTICAL CONTROL NOTE:

ELEVATIONS FOR THIS PLAN ARE BASED ON NAVD 88 GEOID03. FOR INFORMATION ON VERTICAL CONTROL POINTS, CONTACT MNDOT'S OFFICE OF LAND MANAGEMENT

DESIGNED BY:	RKM
DRAWN BY:	KJC
CHECKED BY:	GSB

NO.	BY	DATE	REVISIONS

I hereby certify that this plan was prepared by me or under my direct supervision and that I am a duly Licensed Professional Engineer under the laws of the State of Minnesota.
Certified By: _____ Lic. No. 22814
Licensed Professional Engineer
Printed Name: GREG S. BROWN Date: 1/13/2025

Kimley»Horn

RAMSEY COUNTY, MINNESOTA
BRUCE VENTO TRAIL

CONSTRUCTION PLAN AND PROFILE
STA 50+00 TO STA 62+00

CP01 OF CP10

STATE PROJ. NO. 062-090-005 (BRUCE VENTO TRAIL)

52 / 173

K:\TMC.CIVIL\County\RAMSEY\BRUCE VENTO TRAIL\CAD\Plan Sheets\CD553009.cp01.dgn
$MODELNAME$
1/13/2025
4:49:38 PM

Attachment B

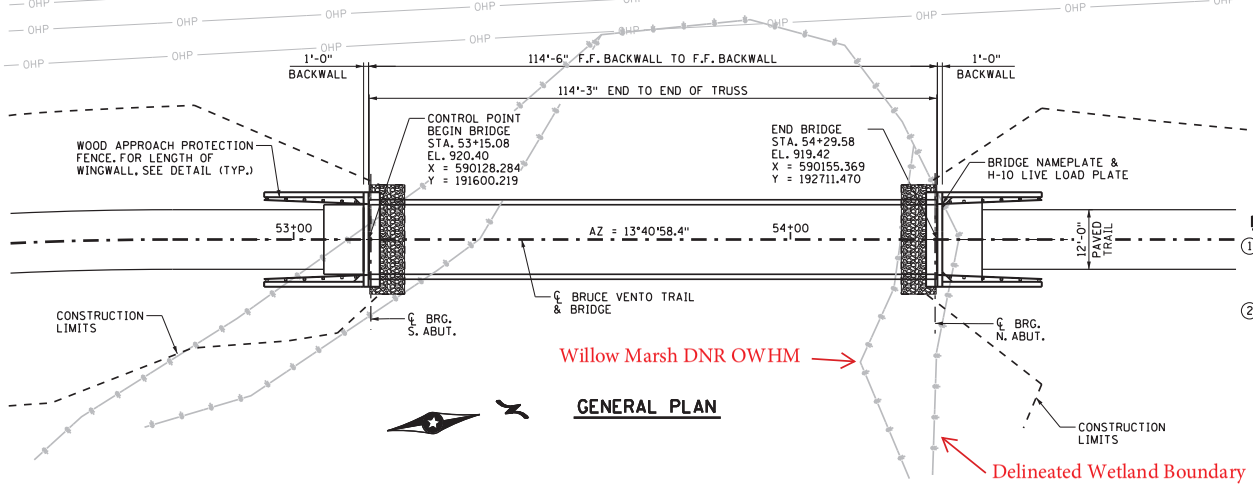

GENERAL PLAN

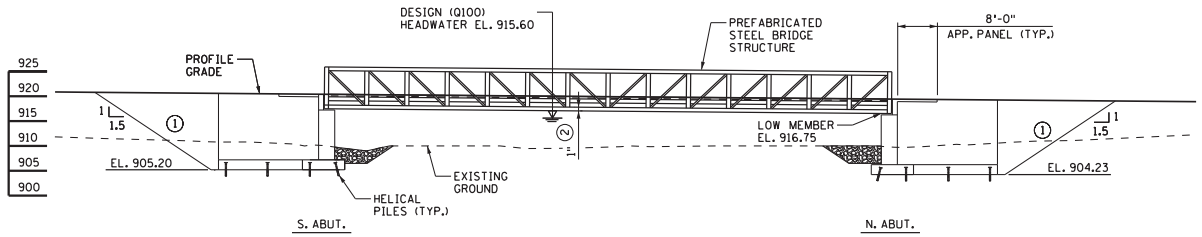

GENERAL ELEVATION

CONSTRUCTION NOTES:

THE 2020 EDITION OF THE MINNESOTA DEPARTMENT OF TRANSPORTATION "STANDARD SPECIFICATIONS FOR CONSTRUCTION" SHALL GOVERN.

THE BAR SIZES SHOWN IN THIS PLAN ARE IN U.S. CUSTOMARY DESIGNATIONS.

BARS MARKED WITH THE SUFFIX "E" SHALL BE EPOXY COATED IN ACCORDANCE WITH SPEC. 3301.

THE SUBSURFACE UTILITY INFORMATION IN THIS PLAN IS UTILITY QUALITY LEVEL D. THIS UTILITY QUALITY LEVEL WAS DETERMINED ACCORDING TO THE GUIDELINES OF CI/ASCE 38-02, ENTITLED "STANDARD GUIDELINES FOR THE COLLECTION AND DEPICTION OF EXISTING SUBSURFACE UTILITY DATA".

THE SURVEY USED IN DEVELOPING THIS BRIDGE PLAN MUST BE VERIFIED WITH THE ACTUAL STREAM LOCATION AT THE TIME OF CONSTRUCTION STAKING. IF THE BRIDGE POSITION IS NOT COMPATIBLE WITH THE STREAM, THE ENGINEER SIGNING THESE PLANS SHALL BE NOTIFIED. IF STATIONING IS CHANGED, THE REVISED PLANS SHALL BE SUBMITTED TO THE OWNER FOR APPROVAL.

BACKFILL FRONT AND BACK SIDE OF ABUTMENTS AND WINGWALLS IN EQUAL LIFTS.

NOTES:

1. BACKFILL BEHIND ABUTMENTS SHALL BE STRUCTURAL BACKFILL PER SPEC. 3149.2.D.2. BACKFILL DENSITY SHALL BE ATTAINED BY THE QUALITY COMPACTION METHOD IN ACCORDANCE WITH SPEC. 2106.3.F.2.
2. PROVIDE 1" RESIDUAL CAMBER PER MNDOT BDM.

DESIGN DATA

DESIGNED IN ACCORDANCE WITH 9TH EDITION, 2020 AASHTO LRFD BRIDGE DESIGN SPECIFICATIONS

DESIGNED IN ACCORDANCE WITH 2009 AASHTO LRFD GUIDE SPECIFICATIONS FOR THE DESIGN OF PEDESTRIAN BRIDGES AND THE CURRENT INTERIM

LOAD RESISTANCE FACTOR DESIGN METHOD
PEDESTRIAN LIVE LOAD = 90 PSF
H-10 TRUCK VEHICULAR LIVE LOAD
(WITHOUT IMPACT)

MAXIMUM ALLOWABLE DESIGN STRESSES:
REINFORCED CONCRETE:
f'c = 4 K.S.I. n = 7.3
fy = 60 K.S.I. FOR REINFORCEMENT
GRADE 60 (EPOXY COATED)
STRUCTURAL STEEL:
WEATHERING STEEL, PER MNDOT 3309 & 3361
TYPE C (UNPAINTED)
fy = 50 K.S.I. MINIMUM

DESIGN SPEED:
OVER = 20 MPH (TRAIL)

DECK AREA = 1600 SQUARE FEET

LIST OF SHEETS

NO.	DESCRIPTION
73	SOUTH BRIDGE PLAN AND PROFILE
74	TRANSVERSE SECTION AND QUANTITIES
75	SOUTH BRIDGE ABUT. DETAILS 1
76	SOUTH BRIDGE ABUT. DETAILS 2
77	SOUTH BRIDGE ABUT. DETAILS 3
78	APPROACH PROTECTION FENCE DETAILS
79	SLOPE PROTECTION DETAILS
80	DETAILS
81	AS-BUILT DETAILS
82	SURVEY SHEET
83	BORINGS

APPROVED _____ RAMSEY COUNTY

DATE _____

MINNESOTA
DEPARTMENT OF TRANSPORTATION

BRIDGE NO. R1053

BRUCE VENTO TRAIL
PEDESTRIAN BRIDGE
OVER BLUFF CREEK
IN WHITE BEAR LAKE
SINGLE-SPAN PREFABRICATED STEEL TRUSS
14'-0" CLEAR WIDTH, 0° SKEW

IDENTIFICATION NO. 302

GENERAL PLAN AND ELEVATION

SEC 34 T 30 N R 22 W

RAMSEY COUNTY CITY OF WHITE BEAR LAKE

APPROVED: _____ STATE BRIDGE ENGINEER

DATE: _____

DESIGNED BY:	JCB				
DRAWN BY:	PHH				
CHECKED BY:	MDJ	NO.	BY	DATE	REVISIONS

I hereby certify that this plan was prepared by me or under my direct supervision and that I am a duly Licensed Professional Engineer under the laws of the State of Minnesota.

Certified By: _____ Lic. No. 44587
Licensed Professional Engineer

Printed Name: MATTHEW D. JENSEN Date: 1/14/2025

Kimley»Horn

RAMSEY COUNTY, MINNESOTA
BRUCE VENTO TRAIL

SOUTH BRIDGE PLAN AND PROFILE

BRIDGE NO. R1053

BRD12 OF BRD22

STATE PROJ. NO. 062-090-005 (BRUCE VENTO TRAIL)

73 / 173

9:14:43 AM
1/14/2025
K:\TMC.CIVIL\County\RAMSEY\BRUCE VENTO TRAIL\CAD\Plan Sheets\CBRR1053_s12.dgn
$MODELNAME$

RAMSEY-WASHINGTON
METRO WATERSHED DISTRICT

PERMIT PROGRAM MONTHLY MEMORANDUM

Date: March 5th, 2025

To: Board of Managers and Staff

From: Nicole Maras, Regulatory Program Manager
Mary Fitzgerald, Regulatory Specialist
Kendra Kloth, Regulatory Technician

During February 2025:

Number of Violations: **0**

Permit Program- Ongoing Activities, Trainings, and Coordination Meetings:

- Ongoing: Site inspections/reporting, rule guidance assistance & inquiries, Wetland Conservation Act (WCA) administration & procedures, permit submittal review with Barr Engineering, Leadership Essentials certification coursework, permit webpage updates, MS4 action items and data tracking
- 2/4-2/5- BWSR training: WCA 101
- 2/5- MN Wetland Professionals Association training on coordination with tribal nations
- 2/13- Preconstruction meeting: St. Paul Fish Hatchery Trail
- 2/13- University of MN Construction Installer certification class observation
- 2/14- Meeting w/ City of Roseville: BMP inspection efforts/coordination
- 2/19- BWSR training on 2024 WCA statute updates
- 2/19- Meeting w/ City of Maplewood: Century Ponds development
- 2/20- Maplewood site visit in response to inquiry received via “Report a Problem” function on website
- 2/20- Meeting w/ City of Woodbury: BMP inspection efforts/coordination

Single Lot Residential Permits Approved by Staff:

None

Permits Closed:

None

Additional Info/Updates:

Mary and Kendra attended the Minnesota Erosion Control Association conference hosted in St. Cloud on January 28th-29th. The first day of the conference was an all-day workshop format where attendees could pick from 3 different topics. Kendra attended a soils workshop and learned techniques for identifying soil types in the field, and how soil type is important in construction and wetland activity. Mary attended a workshop that went through MS4 training and documentation requirements. The next day of the conference was a more traditional format with many session topics to choose from. Two sessions of interest were about planning for snow management to reduce salt usage and using drones for site inspections. Both topics seemed to still be in the research or initial implementation stage but were interesting to consider for future planning in the RWMWD Regulatory Program.

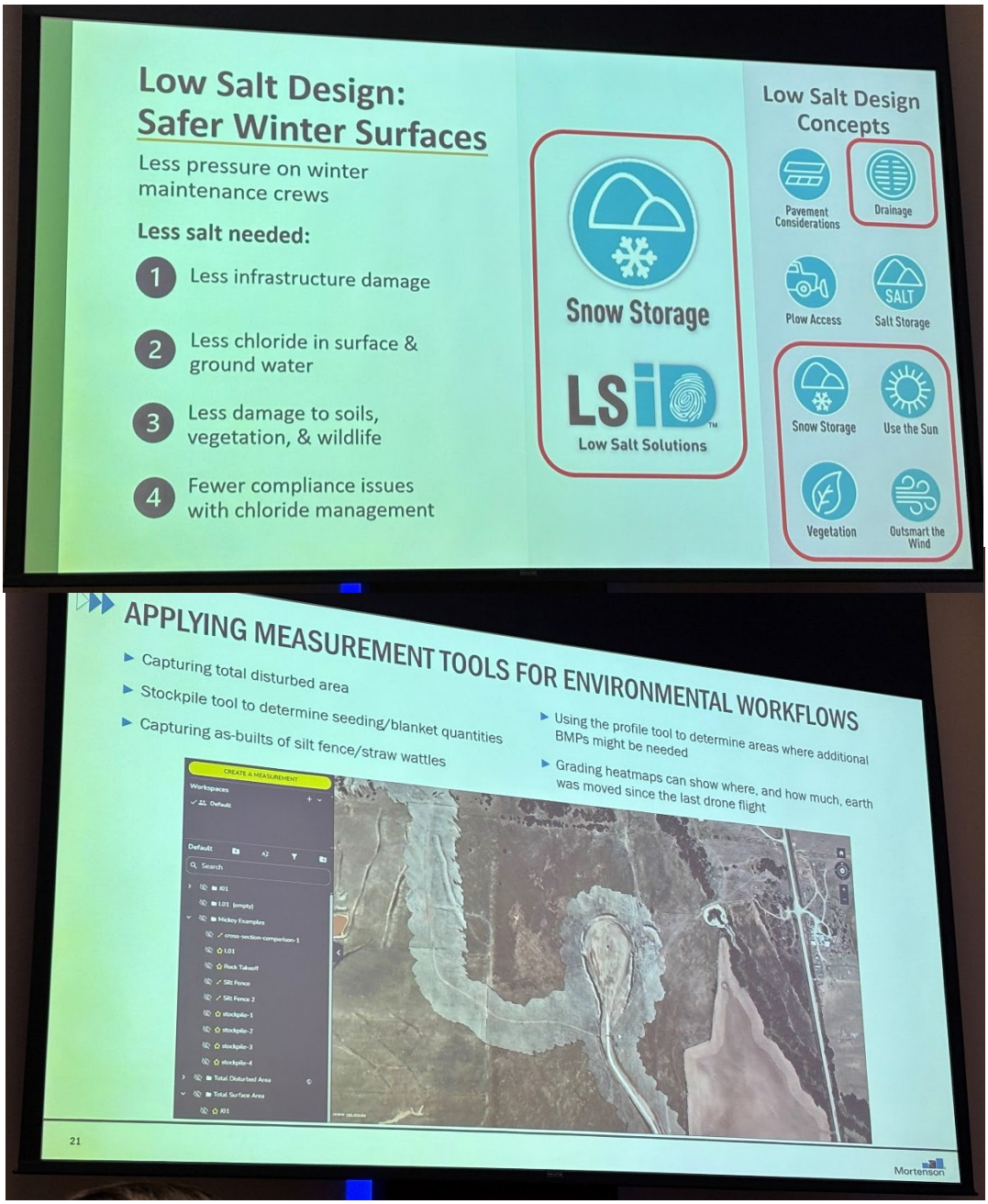

On January 30th, Washington County hosted a kick-off planning meeting for the Battle Creek-St. Croix Regional Trail Project. The future trail would run through east Maplewood, Woodbury, and Afton. The purpose would be to connect trail users to various regional destinations between Battle Creek Regional Park and the St. Croix River in downtown Afton.

Nicole and Paul have agreed to participate on the Technical Advisory Committee (TAC) for the long-range planning for this trail corridor and will continue to attend upcoming meetings. The purpose of the TAC is to provide guidance on future trail alignment as well as potential opportunities to protect and enhance natural and cultural resources within the corridor. If the board has any thoughts (now or in the future) for ways in which the county can best engage with RWMWD and our partners/stakeholders during the planning process, please let staff know so we can pass along that feedback.

Anticipated Planning Timeline:

Winter-Spring 2025	Visioning and Site Analysis
Spring-Summer 2025	Public Engagement and Data Collection
Summer-Fall 2025	Route Development and Plan Drafting
Winter-Spring 2026	Draft Plan Approval Process

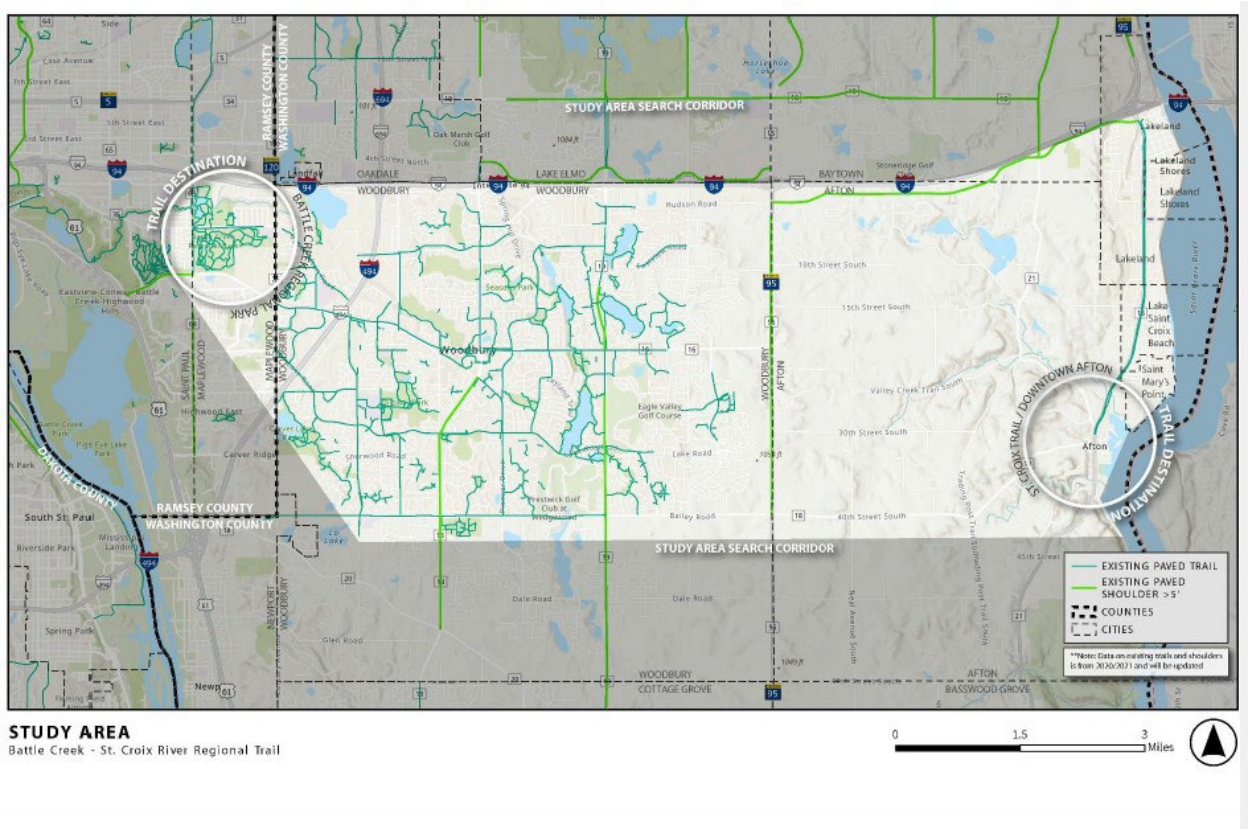

[Battle Creek - St Croix River Regional Trail Plan | Washington County, MN - Official Website]

****

Stewardship Grant Program

****

Stewardship Grant Program Budget Status Update

March 5, 2025

		Last Month	This Month	Last Month	This Month
Homeowner	**Coverage**	**Number of Projects: 6**	**Number of Projects: 7**	**Funds Allocated**	**Funds Allocated**
Habitat Restoration and rain garden w/o hard surface drainage	50% Cost Share $15,000 Max	3	3	$2,850	$2,850
Rain garden w/hard surface drainage, pervious pavement, green roof	75% Cost Share $15,000 Max	2	3	$20,350	$34,750*
MN Water Steward Project	100% Cost Share $15,000 Max	0	0	$0	$0
Shoreland Restoration	100% Cost Share $15,000 Max	1	1	$15,000	$15,000

		Last Month	This Month	Last Month	This Month
Commercial, School, Government, Church, Associations, etc.	**Coverage**	**Number of Projects: 0**	**Number of Projects: 0**	**Funds Allocated**	**Funds Allocated**
Habitat Restoration	50% Cost Share $15,000 Max	0	0	$0	$0
Shoreland Restoration (below 100-year flood elevation w/actively eroding banks)	100% Cost Share $100,000 Max	0	0	$0	$0
Priority Area Projects	100% Cost Share $100,000 Max	0	0	$0	$0
Non-Priority Area Projects	75% Cost Share $50,000 Max	0	0	$0	$0
Public Art	50% Cost Share $15,000 Max/Project	0	0	$0	$0
Aquatic Veg Harvest/LVMP Development	50% Cost Share $15,000 Max	0	0	$0	$0
Enhanced Street Sweeping ($250,000 Reserved)	Varies Cost Share $100,000 Max	0	0	$0	$0

Maintenance	50% Cost Share $7,500 Max for 5 Years	83	67	$56,935	$56,935
Consultant Fees				$0	$3,104
Total Allocated				**$95,135**	**$112,639**

**includes funds to be approved at current board meeting*
*** includes staff approvals since previous board meeting*

2024 Stewardship Grant Program Budget		
	Last Month	This Month
Budget	$1,250,000	$1,250,000
Total Funds Allocated	$95,135	$112,639
Total Available Funds	**$1,154,865**	**$1,137,362**

****

Action Items

****

Request for Board Action

Board Meeting Date: March 5, 2025 **Agenda Item No:** 7A

Preparer: Tina Carstens, Administrator

Item Description: Board of Managers 2025 Annual Meeting

Background:

The following is official business for the board to take action on at this annual meeting:

1. **Board Governance Manual**
   Last year, the board approved new bylaws and governance documents and requested that they be included each year in the packet for the annual meeting. The document is attached for your review. I am not recommending any changes at this time.

2. **Elections of Officers**
   The board must select a president, vice president, treasurer, and secretary. The current officers are as follows:

President	Val Eisele
Vice President	Benjamin Karp
Treasurer	Open (past board member Matt Kramer)
Secretary	Mark Gernes

   The **President** will serve as the chairperson for all meetings, be a signatory to the District's account, and sign contracts or correspondence as approved by the board. The president will always have full voting privileges and does not need to confine their voting to break ties of the managers. The president may also work with the administrator to develop monthly meeting agendas.

   The **Vice President** will perform the President's duties in the event of an absence. The Vice President is also responsible for being the personnel representative of the board. This means that the Vice President would coordinate the Administrator's review and consult with the Administrator on possible personnel issues.

   The **Treasurer** will be a signatory on District accounts and sign the monthly checks at each month's board meeting. The duties of preparing the monthly reports of records to describe the financial condition of the District and arranging for an annual audit are delegated to district staff.

The **Secretary** will ensure meeting minutes are prepared and approved by the board and sign documents requiring multiple signatures. The preparation and distribution of the meeting minutes and proper meeting notice posting is delegated to district staff.

Staff recommendation is for the board to elect its president, vice president, treasurer, and secretary for the next year.

3. **Citizen Advisory Committee Membership, Board Liaison Appointment, and Activities**
Below is the membership list for the CAC. All 2024 members wish to renew their involvement on the CAC for 2025.

- John Chikkala (Woodbury)
- Jill Danner (St. Paul)
- Randee Edmundson (Schools)
- Hallie Finucane (Roseville)
- Dana Larsen-Ramsay (Business Community)
- Gary Nelson (Maplewood)
- Glen Olson (North St. Paul)
- Scott Ramsay (Shoreview)
- Gary Schroeher (White Bear Lake)
- Karen Wold (Master Naturalist)
- Jennifer Wickre (Environmental Agency/Organization)
- Cliff Aichinger (At-Large, St. Paul)
- Rachel Finberg (At-Large, St. Paul)
- Megan Taylor (fka Frisvold) (At-large, Maplewood)
- Kathryn Keefer (At-large, Shoreview)
- Stuart Knappmiller (At-large, St. Paul)
- Tammy McCulloch (At-large, Woodbury)

The following are the 2025 work plan items for the CAC:

- Outreach & engagement volunteer program (table at 1 event per quarter)
- Management Plan update
- Salt-use outreach/education
- East Side stewardship & youth relationship
- Rain garden and/or buckthorn cleanup project
- Team planting
- WaterFest logistics
- LEAP Program nominations & subcommittee
- Watershed Excellence Awards planning

The board should designate a CAC liaison.

Staff recommends the board approve the CAC membership, select a board liaison to the committee and approve the 2025 work plan suggestions.

4. Consulting Staff Selection

This is the in-between year where the District is not required to public notice a proposal solicitation for our consultant staff. It is, however, required that these consulting positions be approved by the board each year. The staff does not recommend any changes in these selections.

Staff would recommend that we continue to appoint our existing consultants for 2025 based on the positive experiences and services received from them for many years.

Engineer: Barr Engineering
Attorney: Galowitz Olson
Accountant: Redpath and Company

Staff recommendation is to appoint Barr Engineering, Galowitz Olson, and Redpath and Company as the consultants for 2025.

5. Official Designations

A final item of business is to designate the District's official newspapers and banking institution. Current appointments for each of these items are as follows:

Official Bank of Deposit: 4M Fund with League of Minnesota Cities: US Bank

Official Newspapers: St. Paul Pioneer Press

Staff recommendation is to approve the 4M Fund with LMC: US Bank as our Official Bank of Deposit and the St. Paul Pioneer Press as our Official Newspaper for 2025.

Applicable District Goal and Action Item:

Goal: Manage organization effectively: The District will operate in a manner that achieves its mission while adhering to its core principles.

Action Item: Follow all legal requirements applicable to watershed districts.

Staff Recommendation:

Staff recommends appointing the board officers, consulting staff, citizen advisory committee members, official bank of deposit and official newspapers as shown above.

Financial Implications:

None

Board Action Requested:

Appoint board officers, citizen advisory committee members and designate the desired consulting staff, official bank of deposit, and official newspapers.

RWMWD
Ramsey-Washington Metro Watershed District

Governance Manual – Introduction

Updated March 6, 2024

Ramsey-Washington Metro Watershed District (RWMWD) is a special purpose unit of government established under Minnesota Statutes chapters 103B and 103D. RWMWD is governed by a five-member Board of Managers, four of whom are appointed by the Ramsey County Board of Commissioners and one by the Washington County Board of Commissioners. The day-to-day operations of RWMWD are managed and directed by an Administrator, who implements the watershed management plan adopted by the Board of Managers.

Existing policies were updated to establish the RWMWD Governance Manual, and new policies were developed for adoption. All were then incorporated herein. The manual includes policy and protocol documents for specific statutory or internal management purposes.

The manual establishes written policies, procedures, and instructions for managing RWMWD activities and accounts, complete recordkeeping and records management, and responses to requests for data. The manual also should help to ensure that similar transactions are handled consistently, that accounting principles used are appropriate and proper, and that records and reports are produced in forms desired by the managers and state review entities, including the Legislature, the Office of the State Auditor and the Board of Water and Soil Resources.

The manual will be annually reviewed at the Board of Managers' business meeting (typically in March) and updated as necessary. The manual will be submitted within 60 days of adoption to the Office of the State Auditor in compliance with Minnesota Statutes section 6.756, as will any revisions and additional policies when adopted.

RWMWD staff and contractors are expected to conduct RWMWD business per the manual and alert the Board of Managers to improvements and additions needed.

Except as explicitly provided by law, this governance manual is for the internal guidance of the RWMWD and does not create any rights in any third party. Except as constrained by law, the Board of Managers retains its discretion to deviate from a policy herein as in its judgment circumstances warrant.

Bylaws

Ramsey-Washington Metro Watershed District

Originally Adopted: June 27, 1975

Revised: January 7, 2009

Last Revised: March 6, 2024

These bylaws establish rules governing the conduct and procedure of the Managers of the Ramsey-Washington Metro Watershed District.

Section 1. Place of Meeting. The Ramsey–Washington Metro Watershed District's principal place of business shall be 2665 Noel Drive, Little Canada, Minnesota, 55117 ("District Office"). The standard regular meeting place shall be in the Board Room at the above address, provided that the Managers may adjourn to other meeting places within the District by posting notice of the adjourned meeting place at least twenty-four hours before the meeting.

Section 2. Regular Meetings. The Ramsey -Washington Metro Watershed District shall meet on the first Wednesday of the month and at other times as the Managers shall determine.

Section 2A. Posting. Notice of meetings other than the regular monthly meeting shall be posted in a conspicuous place at the District Office at least 72 hours before said meeting, and comply with all requirements of Minnesota Statutes § 13D.04.

Section 2B. Call of Meeting by Manager. Any Manager may call a meeting other than the regular monthly meetings. If a Manager does so, this shall cause written notice of said meeting to be mailed to each Manager at least eight days before the meeting. The eight-day written notice requirement may be waived by any Manager by their consent in a form adopted by the Board either before or after the meeting to which notice was to be given.

Section 2C. Conducting the Meetings. The meetings shall be presided over by the President or Vice President in their absence. In the absence of the President or Vice President, the remaining Managers shall appoint a President Pro Tem. Except where a public meeting is provided by Minnesota Statutes Chapter 103D and 103B, the meetings are of the Managers only, with speaking and voting privileges granted only to them. The meetings of the Managers, however, shall be open meetings, and the President or any two Managers may call upon other persons to speak on any question before the Managers. The meetings of the Managers shall be informal, but questions of parliamentary procedure shall be resolved by the application of Robert's Rules of Parliamentary Law, Current Revised Edition. Unless otherwise specified in the call for meeting, meetings other than the regular monthly meetings are also regular meetings of the District. At a regular meeting, anything that may properly be brought before the managers can be considered.

Section 2D. Minutes. The Secretary shall cause the preparation and distribution of minutes of all meetings of the Managers. The minutes shall constitute an official record of the proceedings and be reviewed and approved by the Managers. The original minutes shall be

filed and recorded in the office of the Managers, and copies shall be furnished to each Manager.

Section 3. Special Meetings. A special meeting of the Managers is called to conduct certain specified business, and the Managers may only consider such matters. In all other respects, Sections 1 and 2 of the bylaws shall also apply to special meetings.

Section 4. Annual Meeting. The annual meeting of the Ramsey-Washington Metro Watershed District will be held at the regular meeting in March of each year. At the annual meeting, the Managers will elect officers for the District for the term of April of the current year through March of the following year. The Managers will elect the following officers among themselves: President, Vice President, Secretary, and Treasurer. In addition to the election of officers, the Managers shall appoint or reappoint for the ensuing year a bank or depository for funds of the District, a consulting engineer, legal counsel, and other professional assistance as the District may require. Upon motion being made and carried out, these appointments may be continued for action at a subsequent meeting, in which event the appointments continue until terminated or renewed. In all other respects, Sections 1 and 2 of the bylaws shall also apply to annual meetings.

Section 5. Public Meetings. Public hearings or meetings of the Ramsey-Washington Metro Watershed District are governed by Minnesota Statutes Chapters 103D, 103B, and 13D, these bylaws, and Robert's Rules of Parliamentary Law, Current Revised Edition. The President may refuse to recognize anyone appearing before the Board who has already spoken twice on any question.

Section 6. Voting. The President has full voting privileges at all times and may vote on any issue and need not confine their voting to break ties in voting by the Managers.

Section 7. Electronic Communication. Providing there is no violation of the open meeting laws pursuant to the State of Minnesota, the Managers may use electronic forms of communication, including, but not limited to, interactive television and computers.

Section 8. Quorum. A quorum shall consist of any three Managers present. No meeting shall be opened without a quorum.

Section 9. Rules of Procedure. The President may appoint a Parliamentarian who may be one of the Managers or the attorney for the District. The function of the Parliamentarian is to advise the President at their request. The conduct and procedure not provided herein are governed by Minnesota Statutes Chapter 103D and 103B and Robert's Rules of Parliamentary Law, Current Revised Edition.

Section 10. Adoption and Revision. A majority vote of the Managers may adopt these bylaws. Thereafter, suspension or revision of these bylaws shall require the affirmative votes of four of the Managers.

Section 11. Compliance. These bylaws are intended to be consistent with applicable provisions of Minnesota Statutes Sections 103D and 103B. In all cases of omission or error, the requirements of Minnesota Statutes or other applicable law will govern.

General Governance of the Board

I. BOARD OF MANAGERS GOVERNANCE PRINCIPLES

The Ramsey-Washington Metro Watershed District board (Board) governs consistently with the District's vision, mission, and goals identified in the watershed management plan.

The Board commits to conducting business adhering to the highest ethical, legal, and fiduciary standards. Board members shall act solely on behalf of and for the benefit of the District, not for the benefit of themselves, their employer, their place of business, or any other individual interest.

A spirit of openness, sincerity, and mutual respect for the input and opinions of others are critical to the Board's ability to govern effectively. Board members are expected to spend the time necessary to be informed on the issues and attend meetings and District events as necessary.

II. ROLE OF THE BOARD

A. As a whole, the Board is expected to fulfill the following roles:

1. Determine and uphold the District's mission.

2. Hire, support, and assess the Administrator.

3. Support the Administrator in determining staff positions.

4. Ensure an effective strategic planning process by setting short- and long-term goals and program and project priorities and documenting them in the watershed management plan.

5. Ensure adequate resources such as structure, funds, time, volunteers, staff, and technology. Complete the required yearly annual budget and levy process.

6. Develop, monitor, and strengthen the District's programs and services.

7. Ensure legal and ethical integrity, maintain accountability, and exercise fiduciary oversight. Disclose potential and actual conflicts of interest.

8. Elect officers of President, vice president, Secretary, and treasurer.

III. ROLE OF AN INDIVIDUAL BOARD MEMBERS

A. General Expectations

1. Know the District's vision, mission, goals, policies, programs, services, strengths, and needs.

2. Perform duties of board membership responsibly and with energy and enthusiasm.

3. Be an active advocate for the District's policies and programs.

4. Approach issues with an open mind, objectively evaluating all input and information.

B. Meetings

1. Prepare for and actively respectively participate in board meetings.

2. Willingly serve on committees as needed.

3. Maintain confidentiality of the Board's executive sessions and protect the disclosure of private and confidential information.

4. Suggest agenda items as needed to ensure that significant, policy-related matters are addressed.

C. Decision-making

1. Each board member is expected to be actively involved in board discussions. Board members must share their opinions, listen to the opinions of others, and make an effort to see the issues from a variety of perspectives other board members may bring. If a board member holds a view that has not been voiced, it is their obligation to share it during the board meeting – not simply before or after a meeting.

2. Any board member who believes that they have a conflict of interest on any decision must disclose it before the discussion begins and recuse themselves from the discussion and vote.

3. In deciding how to vote, board members are expected to consider the collective interests of all residents within the District and vote with what they believe to be the common interest.

4. After a vote, unless the decision violates their core value, each board member is expected to support the Board's majority decision.

D. Speaking on District Board Matters

1. If it is asked or inferred that an individual board member speaks on behalf of the District, board members should defer to the staff administrator and President. All comments should refer to official district policies and positions.

2. When speaking on district matters in a public setting, board members should be clear if they are representing the District or their personal opinions as a resident of the District.

E. Relationships with Staff

1. Provide advice and support to the district administrator. Keep most communication with the Administrator or request to consult with other district staff.

2. Avoid asking for special staff favors, including special requests for extensive information, without prior consultation with the Administrator or President.

F. Managing Conflicts

1. Serve and respect the organization and its mission. Avoid representing any special interest group or constituency.

2. Maintain independence and objectivity and do what a sense of fairness, ethics, and personal integrity dictate.

3. Except in limited circumstances permitted under Minnesota law, never accept or offer gifts from or to anyone who does business with the District.

G. Financial Management

1. Ensure financial solvency and accountability and the efficient and effective use of funds. Seek clarity from the Administrator when questions arise.

2. Ensure an annual audit is conducted.

3. Approve monthly expenses.

IV. ROLE OF MEMBERS SERVING IN OFFICER POSITIONS

A. President

1. Ensure that the Board and individual members fulfill their responsibilities for the governance of the District and adhere to the Board's governance principles.

2. Be a partner to the Administrator in helping to achieve the District's mission. Provide support and encouragement to the Administrator.

3. Facilitate a productive, mutually respectful relationship between the Board and staff.

4. Assist the Administrator in setting the agenda for each meeting.

5. Chair meetings of the Board, ensuring that the Board functions effectively, interacts with staff optimally, and fulfills all its duties, including reaching timely decisions. In leading discussions, work to ensure that all members participate and that all points of view are fully expressed before a vote is taken.

6. Sign and deliver in the name of the District any contracts, deeds, correspondence, or other instruments pertaining to the business of the District, as authorized by the Board.

7. Be a signatory to the District's financial accounts.

8. The President has full voting privileges, may vote on any issue, and does not need to confine their voting to break ties.

B. Vice-President

1. Fulfill any delegable roles and responsibilities of the President as requested by the President. In the absence or disability of the President, the vice president shall act as President.

2. Serve as the personnel committee of the Board and facilitate an annual review of the Administrator's performance and compensation.

3. Be a signatory to the District's financial accounts.

C. Treasurer

1. Be a signatory to watershed accounts and financial records.

2. Primary reviewer of District financial records.

3. The following treasurer responsibilities are delegated to district staff under the direction of the Board of managers: Develop and maintain the District's financial accounts and records; arrange for the annual audit of the District's financial records; and provide the Board with monthly reports of records to describe the financial condition; deposit all monies, drafts, and checks in the name of and to the credit of the District at such banks and depositories as the Board may approve.

D. Secretary

1. Certify levies, records, and proceedings of the District with their signature.

2. Be a signatory on district financial accounts.

3. The following secretary responsibilities are delegated to district staff: oversee the preparation and distribution of the minutes of all meetings of the District; distribute minutes in advance of meetings; suspend oral reading of minutes at regular meetings; maintain all approved and revised meeting minutes at the district office and oversee the preparation and proper notice of all meetings called by the district board.

District Governance Policies

The following general governance policies help ensure the sound administration of the district business and the continued focus of district resources on protecting and improving the water resources in the Ramsey-Washington Metro Watershed District.

I. Contracting

A. The Board of managers may delegate the authority to approve work change directives and change orders to the Administrator. The Administrator may require a district contractor to secure additional or replacement payment and/or performance bonds to cover any increased price of a district project resulting from a change order approved by the Administrator. A change order approved by the Administrator under delegated authority will be presented to the Board of managers at its next meeting for approval and signature.

II. Per diems

A. Managers may receive one per diem payment per day for participation in a meeting of the Board of managers and other necessary meetings and duties. Per diem payments will be provided at rates and for activities and necessary duties as established by the Board of Managers and indicated on the per diem request form. The per diem claim forms shall be submitted to district staff for processing.

III. Records Management and Retention

A. The District will make and preserve all records necessary to ensure the availability of a full and accurate accounting of the District's official activities.

B. The District will adopt and maintain a records retention schedule to be approved by the state archives office, governing the retention and/or disposal of records created by the District. (document will be in appendix)

C. In keeping with the direction of the Uniform Electronic Transactions Act, the District will create and retain its records in electronic form to the greatest extent possible.

D. The Administrator is the responsible authority for purposes of district compliance with the Data Practices Act, Minnesota Statutes chapter 13.

E. The Administrator is the data practices compliance official for district compliance with the Data Practices Act.

IV. Delegated Authority

A. No employee of the District may exercise authority beyond that allocated to the Administrator by the district bylaws and policies that constitute the Governance Manual.

B. Authority delegated to the Administrator may not be delegated to other employees or contractors.

C. Duties assigned to the Administrator may be delegated to other employees or contractors by the Administrator. However, the Administrator will remain responsible to the Board of Managers for properly executing all delegated duties.

D. The Administrator may not commit funds outside of the approved budget without the approval of the Board of Managers.

V. Managers' Authority

A. No manager may speak on behalf of the District unless authorized by the Board of Managers.

B. No individual manager may provide direction, instructions, or authorization to the Administrator unless specifically authorized by the Board of Managers.

Schedule of Regular Activities

The District will observe the following schedule of required activities to ensure continued compliance with laws and regulations:

A. The District conducts its annual business meeting in March. At that meeting, the Board of managers:
   i. Elect officers of President, vice president, treasurer, and Secretary.

   ii. Approves a schedule of meetings of the Board of Managers for the ensuing year.

   iii. Names a district depository bank and an official newspaper for publication of notices.

   iv. Reviews the district Citizen Advisory Committee membership.

   v. Reviews and, as necessary, directs the preparation of updates to its governance manual.

B. The District annually publishes at least one newsletter or other watershed-wide communication that explains the District's programs and project activities. The Board of Managers' contact information will be maintained on the district website.

C. The District biennially solicits engineering, legal, auditing, accounting, and other professional service proposals following Minnesota Statutes.

D. The District annually audits its accounts and expenditures following Minnesota Statutes.

E. The District annually submits to the Board of Water and Sewer Resources a financial, activity, and audit report each year by May 1 (within 180 days of the end of the District's financial year) following Minnesota Statutes.

F. As the Data Practices Act's responsible authority, the Administrator reviews the District's DPA policy and associated protocols annually to ensure harmony with current law following Minnesota Statutes.

G. Annually, on or before September 30, the District holds a public hearing on its budget for the next year and the total amount of funding necessary to be raised from ad valorem tax levies to meet the budget. After the hearing and considering comments received, the Board adopts the budget and levy, which is then certified to Ramsey and Washington Counties. A final opportunity for citizens to comment on the budget and levy is available at the District's December meeting of the Board before final budget and levy approval.

Request for Board Action

Board Meeting Date: March 5, 2025 **Agenda Item No:** 7B

Preparer: Tina Carstens, Administrator

Item Description: Roosevelt Homes Phase 3 Project Accept Plans & Solicit Bids

Background:
See attached memo for more information on the Roosevelt Homes project.

This project was planned through our Flood Risk Reduction program and will be funded through this project fund and an MPCA Resiliency Grant received for this project. The engineer's opinion of the probable construction cost for phase 3 is $269,300. After approval at this meeting, the bidding process will be followed with a selection of the contractor coming to the board for approval in April.

Applicable District Goal and Action Item:

Goal: Manage risk of flooding – The District will reduce the public's risk to life and property from flooding through programs and projects that protect public safety and well-being.

Action Item: Cooperate with appropriate stakeholders to identify, assess, and address potential flooding problems in the District.

Staff Recommendation:
Staff recommends approval of the preliminary design, estimated costs, and proposed project schedule, and direct staff to finalize the design and bidding documents and solicit bid proposals.

Financial Implications:
This project will be funded from the district's Flood Risk Reduction Fund where sufficient funds are available.

Board Action Requested:
Approve the preliminary design, estimated costs, and proposed project schedule, and direct staff to finalize the design and bidding documents and solicit bid proposals.

Technical Memorandum

To: RWMWD Board of Managers
From: Marcy Bean, Matt Metzger, Andrew Papke-Larson, and Brandon Barnes
Subject: 100% Design Summary for Roosevelt Homes Stormwater Retrofit – Conveyance Improvements (Phase 3)
Date: February 27, 2025
Project: 23/62-1477 (Phase 3)
c: Paige Ahlborg (RWMWD), Tina Carstens (RWMWD), Brent Feller (St. Paul Housing Authority)

1 Introduction

This memorandum summarizes the 100%-level designs of the third (and final) phase of improvements to support stormwater management at Roosevelt Homes. The location of the project is shown in Figure 1, near Ames Avenue in St. Paul. This project was designed in phases to assist St. Paul Housing Authority (SPHA) in mitigating frequent flooding at parts of the Roosevelt Homes property in St. Paul, similar to the flooding that occurred on the property in the summer of 2022 as shown in Figure 2.



Figure 1 Project Location



Figure 2 August 2022 Flooding on Roosevelt Homes Property

Poor drainage within the property resulted in flood damage to existing buildings and property within the Roosevelt Homes development in August 2022.

2 Stormwater Retrofit Design

In 2022, Barr and RWMWD staff began meeting with SPHA to better understand the extents of flooding at the Roosevelt Community Center and surrounding housing community. Regular flooding of the maintenance facility garage is a primary concern, as well as resident parking lots where flood waters often cause damage, as shown in Figure 2. The site is bisected by Ames Avenue, where some water enters the site from the street and flows into the maintenance facility. In addition, limited capacity within the existing pipe system keeps water from leaving the site efficiently.

With these constraints in mind, Barr reviewed and updated stormwater models for the area. We then evaluated design options for providing additional flood storage on site (Phase 1, constructed in 2023) which was planted in 2024 within Phase 2. For this final phase (Phase 3, 2025) we are making modification to site grades to improve overland conveyance.

3 Implementation

In Winter 2023, the first phase of work was complete. The first phase included construction of inlet structures, pipes, and excavation of two stormwater basins. The second phase of work completed the two basins by planting native vegetation and stabilizing slopes. In addition, habitat is being restored through removal of over one acre of turf on a steep slope, being replaced with shortgrass prairie. The decision to split these projects into phases allowed for the vegetation work to be completed by a plant specialist and include the 2-year vegetation maintenance period the District provides to property owners. In tandem, SPHA received grant funding from the Minnesota DNR to support ash tree removal and replacement across the Roosevelt Homes property. Trees were removed and planted in 2024.

Phase 3 includes three areas of work within the property to facilitate drainage away from areas prone to flooding, instead towards the enlarged and improved basins constructed in Phase 1. Phase 3 includes curb cuts, trench drains, improved catch basins and storm pipes, pavement, and fine grading. This project also allowed for site improvements which will remove the playground from the floodplain (in addition to removing the maintenance facility from the floodplain). SPHA's playground was in need of replacement due to its age, so they worked with a partner organization to fund new playground equipment which will be installed as soon as Phase 3 is complete.



Figure 3 December 2023 Construction of Phase 1

Two basins (west at left, east at right) were constructed as part of the Phase 1 work in winter 2023.



Figure 4 November 2024 Basins Post-Planting

Two basins (west at left, east at right) were planted as part of the Phase 2 work in summer 2024.



Figure 5 Roosevelt Homes Property Turf Reduction – Phase 2

Over an acre of turf on this steep slope will be converted into prairie habitat as part of Phase 2. In addition to creating habitat, the prairie plantings will support improved infiltration and slow runoff. This photo is from June 2024, when herbicide application began to convert the turf. Two rounds of herbicide were applied before seeding and hydromulching in Fall 2024. Additional native seedlings will be planted in spring 2025.



Figure 6 Roosevelt Homes Conveyance Improvement – Phase 3

The existing playground was often inundated with water. Phase 3 will help relocate the playground to higher ground and the grading and conveyance system was designed to move the water around the playground toward the larger west basin.



Figure 7 Roosevelt Homes Conveyance Improvement – Phase 3

An existing stormwater flume at the base of the steep hillside will be reconstructed with an appropriately sized structure and improved inlet. This flood prone area will have larger pipes which will connect into the city storm sewer system. The revegetated hillside will also provide more water absorption through the roots of native plantings rather than turf.

4 Engineer's Opinion of Probable Cost

The 100% Phase 3 Conveyance Improvements plan sheets are attached to this memo. A summary of cost, based on construction costs of Phase 1, construction costs for Phase 2, and engineers opinion of cost for Phase 3 are included in Table 1.

Of note, RWMWD applied for and was awarded an Implementation Grant for Stormwater Resilience from the MPCA, which was executed in late 2024. The grant will support up to $343,750, which includes $275,000 of eligible construction costs, $55,000 for engineering, plus contingency.

In the Opinion of Probable Cost for Phase 3, we have estimated a construction cost of $269,300, with an estimated accuracy range of $255,835 (-5%) to $296,230 (+10%). The opinion of cost is intended to provide assistance in evaluating and comparing the project bids and should not be assumed as an absolute rule. The Association for the Advancement of Cost Engineering (AACE) Class 1 opinion of cost was used to define the estimated accuracy range based on the level of project definition.

Table 1 Summary of Phases 1, 2 & 3 Costs for Roosevelt Homes Stormwater Retrofit

Phase of work	Actual Construction Cost	Engineer 's Opinion of Probable Project Construction Cost	Total Estimated Construction Cost Through Phase 3
Phase 1 (Basin construction)	$72,068.50		$72,068.50
Phase 2 (Landscape improvements)	$ 64,664.25		$ 64,664.25
Phase 3 (Conveyance improvements)		$269,300	$269,300
Estimated Total Through Phase 3			$432,962.75
MPCA Resiliency Grant Funding			($275,000.00)
Total Estimated RWMWD Funds for Construction of all Phases			$157,962.75

5 Recommendations

Barr recommends requesting bids for the project to select a contractor for construction of Phase 3. SPHA is willing to provide area to implement improvements and provide long-term maintenance.

6 Schedule

Pending Board approval to bid the Phase 3 Roosevelt Homes Conveyance Improvements, Barr will conduct the project bidding process in March 2025, with the intent to bring bid results back to the Board in April to approve award of a bid. After bidding, if a responsible low bidder is identified, the project could begin installation as early as May 1, 2025 if weather conditions allow.

Attachments

- Specifications Outline (Table of Contents)
- 100% Plans for the Roosevelt Homes Conveyance Improvements

Attachment: Specifications Outline (Table of Contents)

In addition to the attached plans, bid documents are complete and include the following specifications:

Front End Specifications:

Certification Page
Instructions to Bidders
Bid Form
Responsible Bidder Affidavit
Prevailing Wages
Form of Agreement
General Conditions
Supplementary Conditions

Technical Specifications:

01 11 00 Summary of Work
01 22 00 Unit Price Measurement
01 29 00 Payment Procedures
01 35 23 Safety
01 55 26 Traffic Control
01 77 00 Closeout Procedures

Attachment: 100% Plans for the Roosevelt Homes Conveyance Improvements

ROOSEVELT HOMES PHASE 3
STORMWATER CONVEYANCE IMPROVEMENTS
RAMSEY-WASHINGTON METRO WATERSHED DISTRICT
ST. PAUL, MN

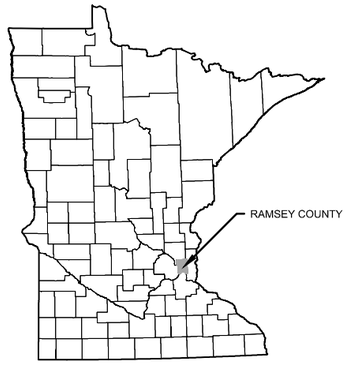

MINNESOTA COUNTY MAP

CONTACTS:

MATT METZGER, SENIOR CIVIL ENGINEER
BARR ENGINEERING CO.
PHONE: 952-832-2830
EMAIL: MMETZGER@BARR.COM

MARCY BEAN, SENIOR LANDSCAPE ARCHITECT
BARR ENGINEERING CO.
PHONE: 952-831-3511
EMAIL: MBEAN@BARR.COM

PAIGE AHLBORG, WATERSHED PROJECT MANAGER
RAMSEY-WASHINGTON METRO WATERSHED DISTRICT
PHONE: 651-792-7964
EMAIL: PAIGE.AHLBORG@RWMWD.ORG

GOPHER STATE ONE CALL

GOPHER STATE ONE CALL:
CALL BEFORE YOU DIG.
1-800-252-1166

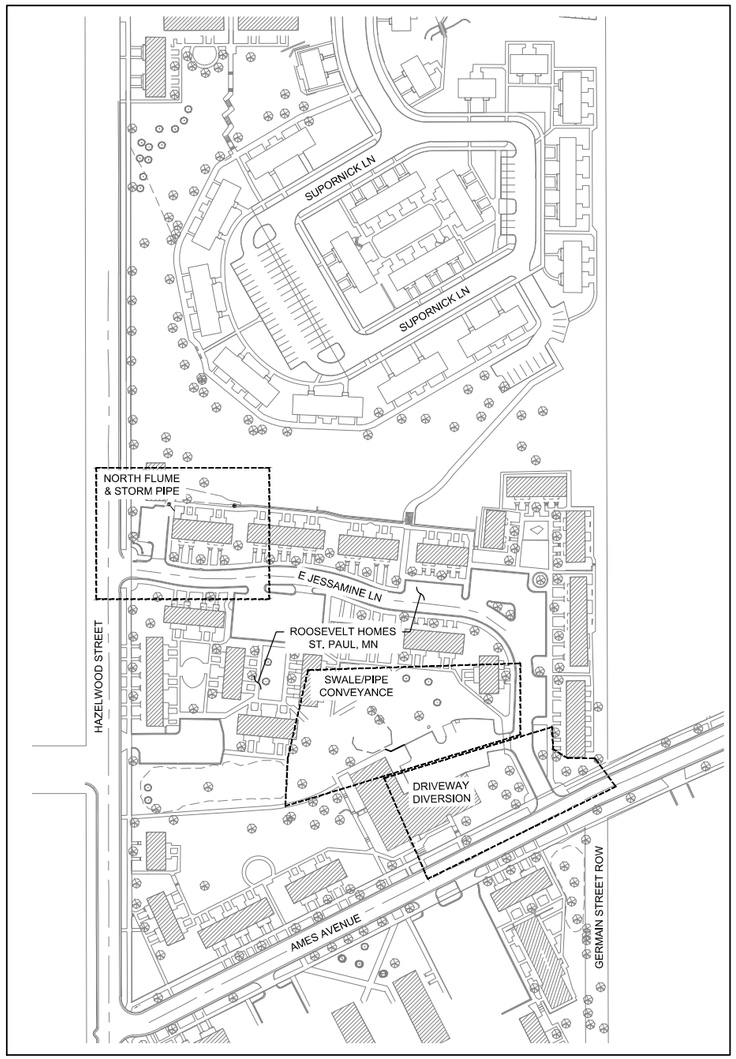

PROJECT LOCATION MAP

0 100 200
SCALE IN FEET

INDEX OF SHEETS

GENERAL
G0.0 ... COVER SHEET AND SHEET INDEX
G1.0 ... GENERAL NOTES
G1.1 ... TECHNICAL SPECIFICATIONS
G1.2 ... CITY OF SAINT PAUL NOTES

C1.-- EXISTING CONDITIONS, REMOVALS, & EROSION CONTROL PLAN
C1.0 ... NORTH FLUME & STORM PIPE
C1.1 ... CONVEYANCE SWALE
C1.2 ... DRIVEWAY DIVERSION

C2.-- SITE PLAN, GRADING PLAN, & PROFILES
C2.0 ... NORTH FLUME & STORM PIPE
C2.1 ... CONVEYANCE SWALE
C2.2 ... CONVEYANCE SWALE PROFILES
C2.3 ... DRIVEWAY DIVERSION

C3.-- DETAILS
C3.0 ... DETAILS - STANDARD
C3.1 ... DETAILS - STANDARD
C4.0 ... DETAILS - CIVIL
C4.1 ... DETAILS - CIVIL
C4.2 ... DETAILS - CIVIL
C4.3 ... DETAILS - CIVIL
C4.4 ... DETAILS - CIVIL
C4.5 ... DETAILS - CIVIL

LANDSCAPE PLAN
L1.0 ... NORTH FLUME & STORM PIPE
L1.1 ... CONVEYANCE SWALE

LANDSCAPE DETAILS
L2.0 ... LANDSCAPE DETAILS

DRAWING NO. PREFIX KEY:

G - GENERAL
C - CIVIL
L - LANDSCAPE

PROJECT COORDINATE SYSTEM:

HORIZONTAL: RAMSEY COUNTY COORDINATES, NAD83, 2011 ADJUSTMENT
VERTICAL: NAVD88

ISSUE FOR BID
AND PERMITTING

NO.	BY	CHK.	APP.	DATE	REVISION DESCRIPTION
-	-	-	-	———	-

I HEREBY CERTIFY THAT THIS PLAN, SPECIFICATION, OR REPORT WAS PREPARED BY ME OR UNDER MY DIRECT SUPERVISION AND THAT I AM A DULY LICENSED PROFESSIONAL ENGINEER UNDER THE LAWS OF THE STATE OF MINNESOTA.

PRINTED NAME MATTHEW R. METZGER
SIGNATURE
DATE 02/03/2025 LICENSE # 47651

CLIENT							
PERMIT				1/24			
BID				02/25			
CONSTRUCTION							
RECORD							
RELEASED TO/FOR	A	B	C	0	1	2	3
	DATE RELEASED						

BARR
Corporate Headquarters:
Minneapolis, Minnesota
Ph: 1-800-632-2277

Project Office:
BARR ENGINEERING CO.
4300 MARKETPOINTE DRIVE
SUITE 200
MINNEAPOLIS, MN 55435
Ph: 1-800-632-2277
Fax: (952) 832-2601
www.barr.com

Scale	AS SHOWN
Date	02/03/2025
Drawn	MRM/AMP3
Checked	MRM/MDB3
Designed	MRM/MDB3
Approved	MRM

RAMSEY-WASHINGTON METRO WATERSHED DISTRICT

ROOSEVELT HOMES PHASE 3
SAINT PAUL, MINNESOTA

-
COVER SHEET AND SHEET INDEX

BARR PROJECT No.	23621477.03
CLIENT PROJECT No.	
DWG. No.	G-0.0
REV. No.	0

CADD USER: ANDREW M. PAPKE-LARSON FILE: M:\DESIGN\23621477.01\PHASE 2 CAD FILES\23621477_SHEET_G0.0_COVER.DWG PLOT SCALE: 1:2 PLOT DATE: 2/3/2025 2:13 PM

GENERAL NOTES:

GENERAL NOTES

1. CONTRACTOR SHALL ASSUME FULL RESPONSIBILITY FOR ANY AND ALL DAMAGE RESULTING FROM CONTRACTOR'S WORK. CONTRACTOR SHALL REPAIR OR REMOVE, AND/OR REPLACE ITEMS THAT ARE DAMAGED DUE TO CONTRACTOR'S ACTIVITIES. REPAIR OR REPLACEMENT WILL BE AT THE EXPENSE OF CONTRACTOR AND MUST BE PERFORMED TO THE CONDITION, AT MINIMUM, EQUAL TO THE CONDITION PRIOR TO START OF THE WORK.
2. ANY PUBLIC INFRASTRUCTURE DAMAGE RESULTING FROM THE CONTRACTORS ACTIVITIES, INCIDENTAL OR OTHERWISE, SHALL BE REPAIRED/REPLACED TO THE SATISFACTION OF THE CITY AT NO COST TO THE CITY.
3. SITE SHALL BE KEPT REASONABLY FREE FROM DEBRIS, TRASH AND CONSTRUCTION WASTES RESULTING FROM THE PERFORMANCE OF THE WORK. ALL TRASH, DEBRIS, AND WASTE MATERIALS SHALL BE REMOVED FROM THE SITE AND DISPOSED OF BY THE CONTRACTOR AT A LICENSED WASTE DISPOSAL OR RECYCLING FACILITY, ON A REGULAR BASIS.
4. OBSTRUCTION PERMITS: THE CONTRACTOR MUST OBTAIN AN OBSTRUCTION PERMIT IF CONSTRUCTION (INCLUDING SILT FENCES) WILL BLOCK CITY STREETS, SIDEWALKS OR ALLEYS, OR IF DRIVING OVER CURBS.
5. A TEMPORARY PEDESTRIAN ACCESS ROUTE (TPAR) AND/OR A TEMPORARY TRAFFIC CONTROL (TTC) PLAN MAY BE REQUIRED AS PART OF THE RIGHT-OF-WAY (ROW) PERMITTING PROCESS. SAID TTC OR TPAR PLANS MUST BE APPROVED BY THE CITY PRIOR TO THE ROW PERMITTING OFFICE ISSUING A PERMIT(S).

EXISTING CONDITIONS

1. PRIOR TO COMMENCING WORK AT THE SITE, CONTRACTOR SHALL CONTACT GOPHER STATE ONE CALL AND HAVE ALL EXISTING UTILITIES, PUBLIC AND PRIVATE, FIELD LOCATED AND MARKED. EXISTING UTILITIES SHALL BE PROTECTED UNLESS OTHERWISE INDICATED. ANY UTILITIES DAMAGED BY CONTRACTOR SHALL BE REPAIRED OR REPLACED AT EXPENSE OF CONTRACTOR.
2. IF SITE CONDITIONS OR UTILITIES DIFFER SIGNIFICANTLY FROM THAT SHOWN, CONTRACTOR SHALL NOTIFY ENGINEER IMMEDIATELY.
3. ALL EXISTING UTILITIES MUST REMAIN OPERATIONAL FOR THE DURATION OF CONSTRUCTION, UNLESS OTHERWISE NOTED.
4. CONTRACTOR SHALL NOT DISTURB EXISTING VEGETATION AREAS WHERE GRADING IS NOT TO OCCUR OR, IN ANY CASE, OUTSIDE OF CONSTRUCTION LIMITS.

SAFETY

1. IN ACCORDANCE WITH ACCEPTED CONSTRUCTION PRACTICES THE CONTRACTOR IS RESPONSIBLE FOR JOB-SITE CONDITIONS AND SAFETY PROCEDURES AND PROGRAMS, INCLUDING SAFETY AND HEALTH OF ALL PERSONS AND PROPERTY, ON THOSE PORTIONS OF THE PROJECT AREA AFFECTED BY OR USED BY THE CONTRACTOR, EMPLOYEES, SUBCONTRACTORS, AGENTS, AND OTHERS DURING PERFORMANCE OF THE WORK. THIS REQUIREMENT WILL APPLY CONTINUOUSLY AND NOT BE LIMITED TO NORMAL WORKING HOURS. THE CONTRACTOR IS RESPONSIBLE FOR THE PROTECTION OF PROPERTY AND THE SAFETY AND HEALTH OF ITS EMPLOYEES, SUBCONTRACTORS, SUPPLIERS, AGENTS AND OTHERS WITHIN THE PROJECT AREA.
2. CONTRACTOR SHALL BE RESPONSIBLE FOR KEEPING THE SITE PERIMETER SAFE FOR PUBLIC ON OR ADJACENT TO SITE FOR THE DURATION OF THE WORK. CONTRACTOR SHALL BE RESPONSIBLE FOR ALL SITE SAFETY PRECAUTIONS.
3. INSPECTION CONTACT: THE CONTRACTOR SHALL CONTACT THE RIGHT OF WAY INSPECTOR TESHOME HAILEMARIAM, 651-238-0681 (TWO WEEKS PRIOR TO BEGINNING WORK) TO DISCUSS TRAFFIC CONTROL, PEDESTRIAN SAFETY AND COORDINATION OF ALL WORK IN THE PUBLIC RIGHT OF WAY. NOTE: IF A TWO WEEK NOTICE IS NOT PROVIDED TO THE CITY, ANY RESULTING DELAYS SHALL BE THE SOLE RESPONSIBILITY OF THE CONTRACTOR.

DEMOLITION

1. CONTRACTOR SHALL COORDINATE ALL REMOVALS WITH ENGINEER. CONTRACTOR SHALL PROTECT ALL EXISTING STRUCTURES AND UTILITIES NOT DESIGNATED FOR REMOVAL. EXISTING UTILITIES AND FACILITIES NOT DESIGNATED FOR REMOVAL SHALL REMAIN OPERATIONAL FOR THE DURATION OF THE WORK. DEMOLISHED DEBRIS, UNLESS OTHERWISE NOTED, SHALL BECOME THE PROPERTY OF CONTRACTOR AND TRANSPORTED OFF SITE FOR RECYCLING OR DISPOSAL IN ACCORDANCE WITH ALL APPLICABLE LAWS AND REGULATIONS.
2. DEMOLISHED DEBRIS SHALL BE RECYCLED PER THE SPECIFICATIONS OR DISPOSED OF AT AN OFFSITE LOCATION WITHIN ALL LOCAL, STATE AND FEDERAL GUIDELINES, LAWS AND REGULATIONS.
3. NO CONCRETE OR RUBBLE SHALL BE BACKFILLED ONSITE. BURNING OF DEBRIS ON SITE SHALL NOT BE ALLOWED.
4. EXISTING STREET TREES ARE TO BE PROTECTED AT ALL TIMES. TREES DAMAGED OR REMOVED DURING CONSTRUCTION SHALL BE RESTORED OR REPLACED TO THE SATISFACTION OF, AND AT NO COST TO, THE CITY AS DETERMINED BY THE FORESTRY MANAGER. THE CONTRACTOR IS ADVISED TO DOCUMENT PRE-EXISTING CONDITIONS OF THE RIGHT OF WAY PRIOR TO BEGINNING CONSTRUCTION.

WORK HOURS

1. THE GENERAL CONTRACTOR AND ALL SUBCONTRACTORS SHALL STRICTLY ADHERE TO THE CITY OF SAINT PAUL AND SAINT PAUL HOUSING AND REDEVELOPMENT AUTHORITY (HRA) RULES FOR WORK HOURS. NO EQUIPMENT SHALL BE STARTED OUTSIDE OF THE STATED WORK HOURS.

PHASING

1. CONTRACTOR SHALL COORDINATE ALL CONSTRUCTION PHASING WITH ENGINEER. CONSTRUCTION LIMITS FOR ALL PHASES OF WORK SHALL BE COORDINATED WITH ENGINEER.
2. CONTRACTOR IS RESPONSIBLE FOR ALL CONTROL OF WATER AND DEWATERING. POSITIVE DRAINAGE MUST BE MAINTAINED INTO THE STORM SEWER FOR THE DURATION OF THE WORK.
3. CONTRACTOR SHALL PHASE WORK TO MINIMIZE EXPOSED SOIL AND EROSION POTENTIAL.

TRAFFIC MANAGEMENT

1. ALL PUBLIC ROADWAYS AND PRIVATE DRIVEWAYS NOT SHOWN AS CLOSED SHALL REMAIN IN SERVICE DURING CONSTRUCTION, UNLESS NOTED OTHERWISE.
2. CONTRACTOR IS RESPONSIBLE FOR ADJUSTING WORK TO ALL CURRENT AND FUTURE ROAD CLOSURES AND DETOURS AROUND THE SITE.

ENVIRONMENTAL

1. THE ESTIMATED DISTURBED AREA IS 14,500 S.F. WITHIN THE ESTIMATED CONSTRUCTION LIMITS 21,500 S.F.
2. CONTRACTOR SHALL INSPECT AND SWEEP PAVED SURFACES TO PREVENT DIRT AND MUD FROM BEING TRACKED OFF SITE. HAUL ROADS SHALL BE MAINTAINED IN ACCORDANCE WITH REQUIREMENTS IN THE SWPPP.
3. PRIOR TO COMMENCING SITE WORK AND DISTURBING EXISTING VEGETATION, CONTRACTOR MUST ESTABLISH TEMPORARY EROSION CONTROL MEASURES.
4. ALL STOCKPILES SHALL BE WITHIN CONSTRUCTION LIMITS. STOCKPILES SHALL BE PROTECTED FROM EROSION IN ACCORDANCE WITH ALL APPLICABLE PERMITS FOR THE WORK. SEE SWPPP.
5. ALL CONTROL OF WATER AND EROSION AND SEDIMENTATION CONTROL MEASURES SHALL BE SEQUENCED, INSTALLED, MAINTAINED AND MONITORED BY CONTRACTOR.
6. ALL WORK SHALL BE PERFORMED IN ACCORDANCE WITH THE STORMWATER POLLUTION PREVENTION PLAN (SWPPP) FOR THE PROJECT. SEE EROSION CONTROL PLANS FOR ADDITIONAL INFORMATION.
7. REDI-MIX CONCRETE WASH-OUT SHALL NOT BE PERMITTED OR DISCHARGED ON-SITE.
8. THE REMOVAL, PRUNING, AND/OR PLANTING OF TREES ON THE PUBLIC BOULEVARD REQUIRES AN APPROVED PERMIT FROM THE CITY FORESTER (651-266-6400). ANY WORK MUST BE COMPLETED BY A LICENSED TREE CONTRACTOR.
9. CONSTRUCTION SUPPLIES, MATERIALS, SPOILS, EQUIPMENT, AND VEHICLES SHALL NOT BE STORED OR OPERATED WITHIN THE DRIP LINE OF ANY PUBLIC STREET TREE OR ON TURF BOULEVARDS WITHOUT PRIOR WRITTEN APPROVAL FROM THE CITY FORESTER. IF THE BOULEVARD MUST BE USED FOR CONSTRUCTION ACTIVITIES, SITE ACCESS ROUTES, MATERIAL STORAGE OR OTHER RELATED ACTIVITIES, PROTECTIVE MEASURES APPROVED BY THE CITY FORESTER SHALL BE TAKEN TO REDUCE SOIL COMPACTION AND PROTECT TREE(S) FROM DAMAGE.

SITE

1. IF THE PROPOSED PIPE HAS LESS THAN 2% SLOPE, LASER EQUIPMENT IS REQUIRED.
2. CONSTRUCTION IN RIGHT OF WAY: ALL WORK ON CURBS, DRIVEWAYS, AND SIDEWALKS WITHIN THE PUBLIC RIGHT OF WAY MUST BE DONE TO CITY STANDARDS AND SPECIFICATIONS BY A CONTRACTOR LICENSED TO WORK IN THE CITY RIGHT-OF-WAY UNDER A PERMIT FROM PUBLIC WORKS SIDEWALK SECTION (651-266-6120).
3. CONTRACTOR IS RESPONSIBLE FOR DAMAGE TO THE MAINLINE SIDEWALK, CURB, DRIVE ACCESS AND BOULEVARD LANDSCAPING CAUSE DURING THE CONSTRUCTION. CONTRACTOR ADVISED TO DOCUMENT PRE-EXISTING CONDITION OF THE RIGHT OF WAY PRIOR TO COMMENCEMENT OF THE CONSTRUCTION.

EARTHWORK NOTES:

GENERAL EXECUTION NOTES:

1. IN ORDER TO MAXIMIZE THE INFILTRATION RATE OF THE SOILS, THE CONTRACTOR SHALL MAKE EVERY EFFORT POSSIBLE TO AVOID COMPACTION OF SUBSOILS IN THE BASINS. PERFORM SOIL LOOSENING AS SPECIFIED AND AS SHOWN ON THE DRAWINGS.
2. EXCESS EXCAVATED MATERIAL AND UNSUITABLE MATERIAL SHALL BECOME THE PROPERTY OF THE CONTRACTOR AND DISPOSED OF OFFSITE.
3. REMOVE ALL SPECIFIED TREES, SHRUBS AND PLANTS PRIOR TO EXCAVATION AND DISPOSE OF OFFSITE AT A COMPOST FACILITY.
4. EXCAVATION PERMITS: ALL DIGGING IN THE PUBLIC RIGHT OF WAY REQUIRES AN EXCAVATION PERMIT. IF THE PROPOSED BUILDING IS CLOSE TO THE RIGHT OF WAY, AND EXCAVATING INTO THE RIGHT OF WAY IS NEEDED TO FACILITATE CONSTRUCTION, CONTACT THE UTILITY INSPECTOR.
5. ORDERING OBSTRUCTION AND EXCAVATION PERMITS: CONTACT PUBLIC WORKS RIGHT OF WAY SERVICE DESK AT (651) 266-6151. IT IS STRONGLY RECOMMENDED THAT CONTRACTORS CALL FOR COST ESTIMATES PRIOR TO BIDDING TO OBTAIN ACCURATE COST ESTIMATES.
6. FAILURE TO SECURE PERMITS: FAILURE TO SECURE OBSTRUCTION PERMITS OR EXCAVATION PERMITS WILL RESULT IN A DOUBLE-PERMIT FEE AND OTHER FEES REQUIRED UNDER CITY OF ST. PAUL LEGISLATIVE CODES.

EXCAVATION NOTES:

1. EXCAVATION SHALL BE COMPLETED WITH A BACKHOE TO MINIMIZE COMPACTION.
2. EXCAVATION AND LOOSENING OF THE SUBSOIL SHALL BE COMPLETED WITH A BACKHOE OR OTHER METHOD THAT PREVENTS THE WEIGHT OF THE EQUIPMENT FROM COMPACTING FILTRATION MEDIA OR SUBSOILS.
3. EXCAVATION SHALL START AT THE FAR SIDE OF A RAINWATER GARDEN OR OTHER PLANTING AREA AND WORK OUT BACKWARDS.
4. THE EXCAVATED AREAS SHALL BE EXCAVATED FROM THE PARKING LOT WHENEVER POSSIBLE. RUBBER TIRED CONSTRUCTION EQUIPMENT SHALL BE STRICTLY PROHIBITED FROM WORKING WITHIN THE EXCAVATED AREA, AS A GENERAL REQUIREMENT, NO CONSTRUCTION EQUIPMENT, INCLUDING SKID STEER LOADERS, SHALL BE ALLOWED IN THE EXCAVATED AREA. IF THIS IS NOT POSSIBLE FOR SOME AREAS, ONLY LOW GROUND PRESSURE EQUIPMENT SHALL BE ALLOWED TO COMPLETE THE WORK.
5. ONLY RUBBER TIRED CONSTRUCTION EQUIPMENT SHALL BE ALLOWED TO WORK FROM THE PAVEMENT.
6. THE CONTRACTOR SHALL CONSTRUCT BASIN AND PLANTING AREAS TO THE DIMENSIONS SHOWN ON THE PLANS.
7. THE ELEVATIONS ON THE PLANS INDICATE FINISHED GRADES.
8. GRADING TOLERANCES FOR SUB CUT:

   VERTICAL +/- 0.1 FEET

   HORIZONTAL +/- 1.0 FEET
9. THE CONTRACTOR SHALL SURVEY THE BOTTOM ELEVATION OF THE BASIN UPON COMPLETION OF THE SUB CUT AND PROVIDE THE SURVEY INFORMATION TO THE ENGINEER. THE ENGINEER SHALL NOTIFY THE CONTRACTOR OF AREAS THAT DO NOT MEET THE TOLERANCES SPECIFIED. THE CONTRACTOR SHALL CORRECT THE WORK PRIOR TO MOVING ON TO THE NEXT STEP.

EXISTING CONDITIONS PROTECTIONS:

1. THE CONTRACTOR SHALL AVOID DAMAGING EXISTING TREES. DO NOT STORE OR DRIVE HEAVY MATERIALS OVER TREE ROOTS. DO NOT DAMAGE TREE BARK OR BRANCHES.
2. THE CONTRACTOR SHALL KEEP PAVEMENTS, FIXTURES AND BUILDINGS CLEAN AND UNSTAINED. ANY DAMAGE TO EXISTING FACILITIES SHALL BE REPAIRED AT THE CONTRACTOR'S EXPENSE. THE PROJECT SITE SHALL BE KEPT CLEAR OF CONSTRUCTION WASTES AND DEBRIS.

SEQUENCE NOTES:

NOTE: THIS WORK SEQUENCE IS FOR KEY SEQUENCING ELEMENTS AND SHOULD NOT BE CONSIDERED A COMPLETE LIST OF WORK. CONTRACTOR SHALL SUPPLEMENT THIS SEQUENCE AS IS NECESSARY FOR PROPER PERFORMANCE OF THE WORK. CONTRACTOR SHALL COORDINATE ALL WORK. CONSTRUCTION SEQUENCE FOR ALL WORK SHALL BE COORDINATED WITH ENGINEER.

1. CONTRACTOR SHALL FURNISH REQUESTED SUBMITTALS PRIOR TO PROCEEDING WITH WORK FOR WHICH SUBMITTALS ARE REQUESTED, IN ACCORDANCE WITH CONTRACT DOCUMENTS
2. INSTALL AND MAINTAIN TRAFFIC MANAGEMENT AND SAFETY MEASURES FOR THE DURATION OF THE WORK
3. FIELD LOCATE EXISTING UTILITIES WITHIN CONSTRUCTION LIMITS
4. INSTALL EROSION CONTROL MEASURES
5. REMOVE EXISTING VEGETATION. STRIP AND STOCKPILE TOPSOIL
6. SAWCUT BITUMINOUS PARKING LOT AND REMOVE BIT (IF NEEDED). ALONG EDGES OF STORMWATER FEATURES
7. PERFORM EXCAVATION AND GRADING
8. STORMWATER STRUCTURE SHOP DRAWINGS MUST BE FURNISHED FOR REVIEW AND APPROVED BY ENGINEER PRIOR TO INSTALLATION.
9. CONSTRUCT FEATURES
10. RESTORE AND VEGETATE ALL DISTURBED AREA
11. AS DIRECTED BY ENGINEER AFTER VEGETATION IS ESTABLISHED, REMOVE FLOW BYPASS
12. MAINTAIN VEGETATION
13. REMOVE EROSION CONTROL MEASURES WHEN DIRECTED BY ENGINEER, FOLLOWING VEGETATION ESTABLISHMENT & STABILIZATION

EROSION PREVENTION AND SEDIMENTATION CONTROL NOTES:

A. EROSION PREVENTION PRACTICES
   CONTRACTOR SHALL BE RESPONSIBLE FOR THE FOLLOWING EROSION PREVENTION PRACTICES:
   1. MPCA CONSTRUCTION GENERAL PERMIT, IF REQUIRED
   2. SWPPP, IF REQUIRED
   3. ALL REQUIREMENTS OF PERMITS ARE RESPONSIBILITY OF CONTRACTOR
   4. THE CONTRACTOR SHALL ATTEMPT TO PHASE ALL WORK TO MINIMIZE EROSION AND MAINTAIN VEGETATIVE COVER TO THE EXTENT POSSIBLE. THE LOCATION OF AREAS NOT TO BE DISTURBED MUST BE DELINEATED ON THE SITE BEFORE CONSTRUCTION BEGINS.
   5. ALL EXPOSED SOILS MUST BE STABILIZED NO LATER THAN 14 DAYS AFTER THE CONSTRUCTION ACTIVITY IN THAT PORTION OF THE SITE HAS TEMPORARILY OR PERMANENTLY CEASED, INCLUDING STOCKPILES WITH SIGNIFICANT SILT, CLAY OR ORGANIC COMPONENTS.

B. SEDIMENT CONTROL PRACTICES
   CONTRACTOR SHALL BE RESPONSIBLE FOR THE FOLLOWING SEDIMENT CONTROL PRACTICES:
   1. CONTRACTOR MUST INSTALL ALL DOWN-GRADIENT PERIMETER CONTROLS BEFORE ANY UP-GRADIENT DISTURBANCE BEGINS. CONTRACTOR SHALL MAINTAIN PERIMETER CONTROLS UNTIL FINAL STABILIZATION.
   2. CONTRACTOR SHALL PROVIDE GRADING AND BMP INSTALLATION TO LIMIT ALL SLOPES OF 3H:1V OR STEEPER TO AN UNBROKEN LENGTH OF 75 FEET OR LESS.
   3. TIMING AND INSTALLATION OF SEDIMENT CONTROL DEVICES CAN BE ADJUSTED BY CONTRACTOR TO ACCOMMODATE SHORT-TERM ACTIVITIES SUCH AS CLEARING AND GRUBBING OR VEHICLE PASSAGE. ANY SHORT-TERM ACTIVITY MUST BE COMPLETED AS QUICKLY AS POSSIBLE AND THE SEDIMENT CONTROL PRACTICES MUST BE INSTALLED IMMEDIATELY AFTER THE ACTIVITY IS COMPLETED AND IN ALL CASES PRIOR TO THE NEXT PRECIPITATION EVENT.
   4. IF PRESENT, ALL STORM SEWER INLETS AND OUTLETS SHALL BE PROTECTED BY CONTRACTOR WITH APPROPRIATE BMP'S DURING THE WORK. THESE PRACTICES SHALL REMAIN IN PLACE UNTIL THE POTENTIAL SOURCES FOR DISCHARGING SEDIMENT TO INLETS HAVE BEEN STABILIZED BY CONTRACTOR.
   5. TEMPORARY SOIL STOCKPILES MUST HAVE SILT FENCE OR OTHER EFFECTIVE SEDIMENT CONTROLS. SOIL STOCKPILES SHALL NOT BE PLACED WITHIN SURFACE WATERS OR STORMWATER CONVEYANCES. CONTRACTOR SHALL INSTALL SILT FENCE PROTECTION AROUND THE LIMITS OF ALL TEMPORARY SOIL STOCKPILE AREAS. ALL SOIL STOCKPILES THAT REMAIN UNDISTURBED FOR A PERIOD GREATER THAN ONE MONTH SHALL BE PROTECTED BY CONTRACTOR WITH COVER OF MULCH, EROSION CONTROL MATS, OR PLASTIC SHEETING.
   6. CONTRACTOR SHALL IMPLEMENT MEASURES TO CONTROL VEHICLE TRACKING OFF SITE.
   7. CONTRACTOR SHALL PROVIDE TEMPORARY SEDIMENTATION BASINS AS REQUIRED BY THE PERMIT.

C. DEWATERING AND BASIN DRAINING
   CONTRACTOR SHALL BE RESPONSIBLE FOR THE FOLLOWING DEWATERING REQUIREMENTS:
   1. CONTRACTOR'S DEWATERING ACTIVITIES THAT HAVE SEDIMENT-LADEN DISCHARGE MUST DISCHARGE INTO A TEMPORARY OR PERMANENT SEDIMENTATION BASIN WHEN POSSIBLE, OTHERWISE IT MUST BE DISCHARGED THROUGH SOME FORM OF BEST MANAGEMENT PRACTICE (BMP) BY CONTRACTOR TO LIMIT SEDIMENT FROM LEAVING THE SITE. PRIOR TO DISCHARGE, THE CONTRACTOR SHALL PERFORM A VISUAL TEST TO ENSURE ADEQUATE TREATMENT IS OBTAINED IN THE BASIN OR BMP AND APPLY ADDITIONAL TREATMENT AS REQUIRED TO ENSURE ADEQUATE TREATMENT. THE DISCHARGE MUST BE DISPERSED OVER AN ACCEPTED ENERGY DISSIPATION MEASURE AND NOT ADVERSELY AFFECT THE RECEIVING WATER OR DOWNSTREAM LANDOWNERS OR WETLANDS.

2. CONTRACTOR IS RESPONSIBLE FOR ALL CONTROL OF WATER AND DEWATERING. POSITIVE DRAINAGE MUST BE MAINTAINED INTO THE STORM SEWER FOR THE DURATION OF THE WORK.

1. INSPECTIONS AND MAINTENANCE
   CONTRACTOR SHALL BE RESPONSIBLE FOR PERFORMING THE FOLLOWING INSPECTIONS AND MAINTENANCE:
   1. WHEN INSPECTIONS FIND EROSION PREVENTION AND SEDIMENT CONTROL BMP'S THAT ARE NONFUNCTIONAL, ALL NONFUNCTIONAL BMP'S MUST BE REPAIRED, REPLACED OR SUPPLEMENTED WITH FUNCTIONAL BMP'S WITHIN 24 HOURS AFTER DISCOVERY.
   2. THE CONTRACTOR MUST ROUTINELY INSPECT THE SITE ONCE EVERY 7 DAYS DURING ACTIVE CONSTRUCTION AND WITHIN 24 HOURS AFTER A RAINFALL EVENT GREATER THAN 0.5 INCHES IN 24 HOURS.
   3. ALL EROSION CONTROL MEASURES MUST BE INSTALLED AND MAINTAINED BY CONTRACTOR ACCORDING TO THE DETAILS INCLUDED IN THE CONSTRUCTION DOCUMENTS AND IN ACCORDANCE WITH THE PRODUCT MANUFACTURER'S RECOMMENDATIONS.
   4. ALL SEDIMENT DEPOSITS WITHIN SURFACE WATERS OR STORMWATER CONVEYANCES MUST BE REMOVED AND RESTABILIZED BY CONTRACTOR WITHIN 7 DAYS OF DISCOVERY, INCLUDING DELTAS AND STORM SEWER SEDIMENT DEPOSITS. THE CONTRACTOR SHALL BE RESPONSIBLE FOR OBTAINING ALL PERMITS REQUIRED, IF NECESSARY, FOR SUCH SEDIMENT REMOVAL.
   5. CONTRACTOR SHALL BE RESPONSIBLE FOR KEEPING EXISTING PAVED SURFACES CLEAN OF SEDIMENT. CONSTRUCTION ENTRANCES SHALL BE CHECKED DAILY BY CONTRACTOR. IF THE ENTRANCE BECOMES INUNDATED WITH SEDIMENT, THE ENTRANCE WILL BE CLEANED OR REPLACED AS APPROPRIATE BY CONTRACTOR. STREETS LEADING TO AND FROM THE CONSTRUCTION ENTRANCE SHALL BE CHECKED DAILY BY CONTRACTOR FOR EVIDENCE OF OFF-SITE SEDIMENT TRACKING ONTO PAVED SURFACES. THESE AREAS WILL BE SWEPT CLEAN OF ANY TRACKED MATERIALS BY CONTRACTOR AS SOON AS POSSIBLE AND WITHIN 24 HOURS OF DISCOVERY. CONTRACTOR SHALL EXTEND SWEEPING TO THE EXTREMITY OF ANY SEDIMENT TRACKING THAT OCCURS OFF SITE.
   6. ALL INFILTRATION/FILTRATION AREAS MUST BE INSPECTED BY CONTRACTOR TO ENSURE THAT NO SEDIMENT FROM ONGOING CONSTRUCTION IS ACCUMULATING OVER THE INFILTRATION/FILTRATION AREA. SEDIMENT ACCUMULATED OVER INFILTRATION/FILTRATION MUST BE REMOVED BY CONTRACTOR.
   7. CONTRACTOR SHALL PROTECT INFILTRATION/FILTRATION AREAS FROM SEDIMENTATION AND OVER-COMPACTION. DURING EXCAVATION, SEDIMENT AND EROSION CONTROL DEVICES MUST BE UTILIZED BY CONTRACTOR TO PREVENT SEDIMENTATION AND THE AREA MUST BE STAKED OFF AND MARKED SO THAT HEAVY CONSTRUCTION EQUIPMENT WILL NOT COMPACT THE SOIL.
   8. INSPECTIONS CAN BE SUSPENDED DUE TO FROZEN GROUND CONDITIONS UNTIL FIRST RUNOFF OCCURS OR CONSTRUCTION ACTIVITIES RESUME.

2. POLLUTION PREVENTION MEASURES
   CONTRACTOR SHALL BE RESPONSIBLE FOR IMPLEMENTING THE FOLLOWING POLLUTION MANAGEMENT MEASURES ON THE SITE:
   1. SOLID WASTE: COLLECTED SEDIMENT, ASPHALT, CONCRETE MILLINGS, FLOATING DEBRIS, PAPER, PLASTIC, FABRIC, CONSTRUCTION AND DEMOLITION DEBRIS AND OTHER WASTES MUST BE DISPOSED OF PROPERLY AND MUST COMPLY WITH MPCA DISPOSAL REQUIREMENTS.
   2. HAZARDOUS MATERIALS: OIL, GASOLINE, PAINT AND ANY HAZARDOUS SUBSTANCES MUST BE STORED IN APPROPRIATE CONTAINERS, INCLUDING SECONDARY CONTAINMENT TO PREVENT SPILLS, LEAKS OR OTHER DISCHARGES. RESTRICTED ACCESS TO STORAGE AREAS MUST BE PROVIDED TO PREVENT VANDALISM. STORAGE AND DISPOSAL OF HAZARDOUS WASTE MUST COMPLY WITH MPCA REGULATIONS.
   3. A DEFINED AREA OF THE SITE MUST BE DESIGNATED FOR USE AS A WASH AREA FOR TRUCKS AND OTHER EQUIPMENT, NO ENGINE DEGREASING ALLOWED ON SITE.
   4. CONCRETE WASHOUT CONTAINMENT SHALL BE PROVIDED ON SITE. THE CONTAINMENT METHOD MUST BE LEAK-PROOF WITH AN IMPERMEABLE LINER. OR ALTERNATIVELY, CONCRETE WASHOUT SHALL BE PERFORMED AT THE CONCRETE MIX PLANT INSTEAD OF ON-SITE.

SUMMARY OF WORK:

1. REFER TO THE BID FORM, TECHNICAL SPECIFICATIONS, MEASURMENT AND PAYMENT SPECIFICATION FOR ADDITIONAL DESCRIPTION OF THE WORK ITEMS.

ISSUE FOR BID
AND PERMITTING

NO.	BY	CHK.	APP.	DATE	REVISION DESCRIPTION

I HEREBY CERTIFY THAT THIS PLAN, SPECIFICATION, OR REPORT WAS PREPARED BY ME OR UNDER MY DIRECT SUPERVISION AND THAT I AM A DULY LICENSED PROFESSIONAL ENGINEER UNDER THE LAWS OF THE STATE OF MINNESOTA.

PRINTED NAME MATTHEW R. METZGER

SIGNATURE _____

DATE 02/03/2025 LICENSE # 47651

CLIENT								
PERMIT				01/24				
BID				02/25				
CONSTRUCTION								
RECORD								
RELEASED TO/FOR	A	B	C	0	1	2	3	
	DATE RELEASED							

BARR
Corporate Headquarters:
Minneapolis, Minnesota
Ph: 1-800-632-2277

Project Office:
BARR ENGINEERING CO.
4300 MARKETPOINTE DRIVE
SUITE 200
MINNEAPOLIS, MN 55435
Ph: 1-800-632-2277
Fax: (952) 832-2601
www.barr.com

Scale	AS SHOWN
Date	02/03/2025
Drawn	MRM/AMP3
Checked	MRM/MDB3
Designed	MRM/MDB3
Approved	MRM

RAMSEY-WASHINGTON METRO WATERSHED DISTRICT

ROOSEVELT HOMES PHASE 3
SAINT PAUL, MINNESOTA

-
GENERAL NOTES

BARR PROJECT No.	23621477.03
CLIENT PROJECT No.	
DWG. No.	G-1.0
REV. No.	0

CADD USER: ANDREW M. PAPKE-LARSON FILE: M:\DESIGN\23621477.01\PHASE 2 CAD FILES\23621477_SHEET_G0.1_GENERAL NOTES.DWG PLOT SCALE: 1:2 PLOT DATE: 2/3/2025 1:52 PM

TECHNICAL SPECIFICATIONS AND SPECIAL PROVISIONS

GENERAL DESCRIPTION:

1. ALL WORK INCLUDED IN THIS SECTION SHALL BE PERFORMED IN ACCORDANCE WITH THE FOLLOWING PARAGRAPHS AND THE PROVISIONS OF THE OTHER CONTRACT DOCUMENTS.
2. WORK COVERED UNDER THIS SECTION INCLUDES PROVIDING ALL MATERIALS, EQUIPMENT, AND LABOR TO FURNISH AND INSTALL STORMWATER MANAGEMENT FEATURES PRESENTED ON THE BARR ENGINEERING CO. DRAWINGS.
3. THIS SPECIAL PROVISION AMENDS THE MINNESOTA DEPARTMENT OF TRANSPORTATION STANDARD SPECIFICATIONS FOR CONSTRUCTION, 2020 EDITION AS DESCRIBED IN THE SECTIONS BELOW.

REFERENCES:

1. MINNESOTA DEPARTMENT OF TRANSPORTATION STANDARD PLATES MANUAL, CURRENT VERSIONS, HEREAFTER REFERRED TO AS MN/DOT STANDARD PLATES.
2. MINNESOTA DEPARTMENT OF TRANSPORTATION STANDARD SPECIFICATIONS FOR CONSTRUCTION, 2020 EDITION, HEREAFTER REFERRED TO AS MN/DOT STANDARD SPECIFICATIONS.
3. AMERICAN SOCIETY FOR TESTING AND MATERIALS, CURRENT EDITION, HEREAFTER REFERRED TO AS ASTM.
4. CITY OF SAINT PAUL STANDARD SPECIFICATIONS AND STANDARD PLATES.

SUBMITTALS:

CONTRACTOR SHALL SUBMIT THE FOLLOWING TO THE OWNER'S REPRESENTATIVE FOR REVIEW AND DOCUMENTATION; MATERIAL CERTIFICATION PRODUCT INFORMATION FOR:

1. REINFORCED CONCRETE PIPE (RCP) AND FLARED END SECTION (FES) MANUFACTURER AND PRODUCT INFORMATION
2. TRENCH DRAIN MANUFACTURER PRODUCT INFORMATION
3. CAST-IN-PLACE CONCRETE MIX DESIGN(S)
4. BITUMINOUS PAVEMENT MIX DESIGN(S) AND TACK COAT PRODUCT INFORMATION
5. GEOTEXTILE FABRIC MANUFACTURER PRODUCT INFORMATION
6. RIPRAP PRODUCT INFORMATION, TYPE, SOURCE AND GRADATION
7. SHOP DRAWINGS FOR STORM MANHOLES, STORM CATCH BASINS AND MODIFICATIONS TO EXISTING STRUCTURES, INCLUDING PRECAST CONCRETE SECTIONS, PIPE CONNECTIONS, RISERS, FRAMES AND CASTINGS
8. SOURCE, SOIL GRADATION AND CERTIFICATION FOR STRUCTURE AND STORM PIPE BEDDING AND GRANULAR ENCASEMENT
9. IMPORT TOPSOIL PRODUCT INFORMATION
10. IMPORT TOPSOIL SOURCE AND CERTIFICATION W/ GRADATION, SOIL TESTING, PERCENT ORGANICS PER MNDOT
11. CHAIN LINK FENCE MATERIALS, DIMENSIONS, AND COATING
12. EROSION CONTROL BLANKET AND MULCHING PRODUCT INFORMATION
13. SEED MIX AND VENDOR INFORMATION

BASIS FOR COMPENSATION:

COMPENSATION FOR ALL WORK COVERED UNDER THIS SECTION OF THESE SPECIFICATIONS SHALL BE AS SET FORTH IN THE CONTRACT DOCUMENTS.

LOCATION OF WORK: THE WORK SHALL BE LOCATED AS SHOWN ON THE DRAWINGS. IT MAY BE NECESSARY FOR ENGINEER TO SHIFT LINES A REASONABLE AMOUNT TO AVOID AN OBSTRUCTION TO THE CONSTRUCTION WORK OR TO REDUCE UTILITY/RIGHT-OF-WAY DIFFICULTIES. CONTRACTOR WILL NOT BE ALLOWED ANY ADDITIONAL COMPENSATION DUE TO MINOR SHIFT OF LINES. ADDITIONAL COMPENSATION WILL BE ALLOWED ONLY FOR LENGTHENING OF LINES, OR FOR PROVIDING ADDITIONAL FITTINGS.

SECTION: MATERIALS & EXECUTION

1. STORM SEWER REINFORCED CONCRETE PIPE (RCP) AND FLARED END SECTIONS (FES)
   - A. REINFORCED CONCRETE PIPE, FITTINGS AND SPECIALS SHALL CONFORM TO THE REQUIREMENTS OF ASTM C-76 (REINFORCED CONCRETE PIPE) WITH RUBBER O-RING OR PROFILE JOINTS FOR THE TYPE, SIZE, AND STRENGTH CLASS SPECIFIED. STORM SEWER PIPE SHALL BE THE TYPE, CLASS AND DIMENSIONS AS SHOWN ON THE DRAWINGS. ALL RCP SHALL BE CLASS V.
   - B. ALL BRANCH FITTINGS SUCH AS TEES, WYES, ETC. SHALL BE CAST AS INTEGRAL PARTS OF THE PIPE. ALL FITTINGS AND SPECIALS SHALL BE OF THE SAME STRENGTH CLASS AS THE PIPE TO WHICH THEY ARE ATTACHED.
   - C. JOINTS SHALL MEET THE REQUIREMENTS OF ASTM C-361 AND BE GASKETED. GASKETED JOINTS SHALL MEET THE PERFORMANCE REQUIREMENTS OF AASHTO M198.
   - D. LIFT HOLES WILL NOT BE PERMITTED UNLESS SPECIFICALLY AUTHORIZED IN THE PLANS, SPECIFICATIONS, AND SPECIAL PROVISIONS. IF LIFT HOLES ARE PERMITTED, THEN ALL LIFT HOLES SHALL BE PLUGGED AND MADE WATERTIGHT FROM THE EXTERIOR PRIOR TO PLACEMENT OF ANY BACKFILL. THE LIFT HOLE PLUG SHALL BE FINISHED SMOOTH TO THE INTERIOR OF THE PIPE.
   - E. AT RCP CONNECTIONS TO CATCH BASIN AND MANHOLE STRUCTURES, ASTM C923 RESILIENT CONNECTOR WATERTIGHT CONNECTION SHALL BE MADE USING A FLEXIBLE BOOT OR GROUTING RING SUCH AS WS WATERSTOP GROUTING RING AS MANUFACTURED BY PRESS-SEAL GASKET CORPORATION, OR APPROVED EQUAL, AS SHOWN ON THE DRAWINGS. GROUTING RING CONNECTION SHALL BE INSTALLED IN ACCORDANCE WITH THE MANUFACTURER'S RECOMMENDATIONS.
   - F. ALL BEDDING AND BACKFILL SHALL BE IN ACCORDANCE WITH THE MANUFACTURER'S RECOMMENDATIONS AND AS SHOWN ON THE DRAWINGS.
   - G. REINFORCED CONCRETE PIPE (RCP), FITTINGS AND SPECIALS SHALL CONFORM TO THE REQUIREMENTS OF MN/DOT STANDARD SPECIFICATION 3236 AND ASTM C76. JOINTS SHALL MEET THE REQUIREMENTS OF ASTM C361. STORM SEWER PIPE END SECTIONS SHALL BE THE TYPE, CLASS AND DIMENSIONS AS SHOWN ON THE DRAWINGS. ALL BEDDING AND BACKFILL SHALL BE IN ACCORDANCE WITH THE MANUFACTURER'S RECOMMENDATIONS AND AS SHOWN ON THE DRAWINGS.
   - H. THE TYPE, KIND AND CLASS OF PIPE TO BE USED SHALL BE AS SHOWN ON THE DRAWINGS OR AS SPECIFIED HEREIN. ALL PIPE SHALL BE LAID AND MAINTAINED TO THE REQUIRED LINE AND GRADE. INSTALLATION OF THE PIPE SHALL BE IN ACCORDANCE WITH ASTM RECOMMENDED PRACTICE D2321 AND AS RECOMMENDED BY THE MANUFACTURER.
   - I. PIPE AND STRUCTURE BED PREPARATION SHALL BE AS SHOWN ON THE DRAWINGS FOR THE TYPE, SIZE, DEPTH, AND SOIL CONDITIONS SHOWN.
   - J. ALL GRAVITY PIPE SHALL BE LAID USING APPROVED GRADE BOARDS, FURNISHED AND SET BY CONTRACTOR AT NO ADDITIONAL COST TO OWNER, OR LASER BEAM CONTROL. CONTRACTOR SHALL PROVIDE AND USE A SUITABLE GRADE ROD TO INSURE THE PROPER GRADE OF THE PIPE.
   - K. AT THE TIME OF PIPE PLACEMENT, THE BEDDING CONDITIONS SHALL BE SUCH AS TO PROVIDE UNIFORM AND CONTINUOUS SUPPORT OF THE PIPE BETWEEN BELL HOLES. BELL HOLES SHALL BE EXCAVATED AS NECESSARY TO MAKE THE JOINT CONNECTIONS, BUT THEY SHALL BE NO LARGER THAN WOULD BE ADEQUATE. NO PIPE MATERIAL SHALL BE LAID IN WATER NOR WHEN THE TRENCH OR BEDDING CONDITIONS ARE OTHERWISE FROZEN, UNSUITABLE OR IMPROPER. UNLESS OTHERWISE PERMITTED BY ENGINEER, BELL AND SPIGOT PIPE SHALL BE LAID WITH THE BELL ENDS FACING UPGRADE AND THE LAYING SHALL START AT THE DOWNGRADE END AND PROCEED UPGRADE.
   - L. BEFORE BEING LOWERED INTO LAYING POSITION, CONTRACTOR SHALL MAKE A THOROUGH VISUAL INSPECTION OF EACH PIPE SECTION AND APPURTENANT UNITS TO DETECT DAMAGE OR UNSOUND CONDITIONS THAT MAY NEED CORRECTIVE ACTION OR BE CAUSE FOR REJECTION. CONTRACTOR SHALL INFORM ENGINEER OF ANY DEFECTS DISCOVERED.
   - M. IMMEDIATELY BEFORE PLACEMENT, THE JOINT SURFACES OF EACH PIPE SECTION AND FITTING SHALL BE INSPECTED FOR THE PRESENCE OF FOREIGN MATTER, COATING BLISTERS, ROUGH EDGES OR PROJECTIONS, AND ANY IMPERFECTIONS SO DETECTED SHALL BE CORRECTED BY CLEANING, TRIMMING, OR REPAIR AS NEEDED.
   - N. ANY DEFECTIVE OR DAMAGED PIPE, OR GRAVITY PIPE WHICH HAS HAD ITS GRADE OR JOINT DISTURBED AFTER LAYING, SHALL BE REPLACED.
   - O. AS EACH LENGTH OF BELL AND SPIGOT PIPE IS PLACED IN LAYING POSITION, THE SPIGOT END SHALL BE CENTERED IN THE BELL AND THE PIPE FORCED HOME AND BROUGHT TO CORRECT LINE AND GRADE. THE PIPE SHALL BE SECURED IN PLACE WITH APPROVED BACKFILL MATERIAL, WHICH SHALL BE THOROUGHLY COMPACTED AROUND THE PIPE. WHERE SHOWN ON THE DRAWINGS PROVIDE GRANULAR ENCASEMENT OVER THE PIPE AND CAREFULLY COMPACT INTO PLACE TO AVOID DAMAGING PIPE. THE JOINT AREAS SHALL REMAIN EXPOSED AND PRECAUTIONS SHALL BE TAKEN TO PREVENT THE SOIL FROM ENTERING THE JOINT SPACE, UNTIL THE JOINT SEAL IS AFFECTED.
   - P. ALL SIGNAGE AND STRIPING SHALL BE IN ACCORDANCE WITH CITY OF SAINT PAUL STANDARD SPECIFICATIONS AND THE MANUAL FOR UNIFORM TRAFFIC CONTROL DEVICES (MUTCD).
   - Q. ALL WALKWAYS AND ACCESS PATHS SHALL CONFORM TO AMERICANS WITH DISABILITIES ACT (ADA): ACCESSIBILITY STANDARDS, CURRENT EDITION.

2. STORM SEWER PIPE (DUCTILE IRON PIPE)
   - A. ALL DUCTILE IRON PIPE (DIP) SHALL BE DIRECT BURIAL AND SIZE AND TYPE SHOWN ON DRAWING AND CONSISTENT WITH ASTM A377, FOR CLASS SHOWN ON THE DRAWINGS. ALL DIP SHALL BE CL54.
   - B. DUCTILE IRON PIPE SHALL CONFORM TO THE REQUIREMENTS OF MNDOT STANDARD SPECIFICATION 3365.
   - C. DUCTILE IRON PIPE SHALL CONFORM TO THE REQUIREMENTS OF AWWA C115 OR C151 FOR WATER AND THICKNESS DESIGN SHALL CONFORM TO AWWA C150.
   - D. FITTINGS SHALL CONFORM TO THE REQUIREMENTS OF AWWA C110 OR 153 (GRAY IRON AND DUCTILE IRON FITTINGS OR DUCTILE IRON COMPACT FITTINGS) FOR THE JOINT TYPE SPECIFIED.
   - E. UNLESS OTHERWISE SPECIFIED, ALL PIPE AND FITTINGS SHALL BE FURNISHED WITH CEMENT MORTAR LINING MEETING THE REQUIREMENTS OF AWWA C104 FOR STANDARD THICKNESS LINING. ALL EXTERIOR SURFACES OF THE PIPE AND FITTINGS SHALL HAVE AN ASPHALTIC COATING AT LEAST ONE MIL THICK. SPOTTY OR THIN SEAL COATING, OR POOR COATING ADHESION, SHALL BE CAUSE FOR REJECTION. ALL DUCTILE IRON PIPES SHALL BE INSTALLED WITH EXTERIOR POLY WRAP.
   - F. RUBBER GASKET JOINTS FOR DUCTILE IRON PRESSURE PIPE AND FITTINGS SHALL CONFORM TO AWWA C111.
   - G. AT DIP CONNECTIONS TO CATCH BASIN AND MANHOLE STRUCTURES, A FLEXIBLE, WATERTIGHT CONNECTION SHALL BE MADE USING FLEXIBLE MOLDED BOOT (KOR-N-SEAL) W/ GEAR CLAMP AND EXPANDABLE INTERNAL BAND, OR APPROVED EQUAL, AS SHOWN ON THE DRAWINGS. FLEXIBLE BOOT AND CONNECTION SHALL BE INSTALLED IN ACCORDANCE WITH THE MANUFACTURER'S RECOMMENDATIONS.
   - H. STORM SEWER PIPE SHALL BE THE TYPE, CLASS AND DIMENSIONS AS SHOWN ON THE DRAWINGS.
   - I. TRENCH AND BEDDING AND COVER SHALL BE TYPE V AS SHOWN ON THE DRAWINGS, MINIMUM.
   - J. FOLLOW MINIMUM AND MAXIMUM COVER REQUIREMENTS PER THE PIPE MANUFACTURER'S RECOMMENDATIONS. ALL BEDDING AND BACKFILL SHALL BE IN ACCORDANCE WITH THE MANUFACTURER'S RECOMMENDATIONS AND AS SHOWN ON THE DRAWINGS.
3. GEOTEXTILE FABRIC
   - A. GEOTEXTILE FABRIC SHALL BE MN/DOT TYPE V OR THE TYPE SHOWN ON THE DRAWINGS. GEOTEXTILE FABRIC SHALL BE IN ACCORDANCE WITH MN/DOT STANDARD SPECIFICATION 3733. ALL BEDDING AND BACKFILL SHALL BE IN ACCORDANCE WITH THE MANUFACTURER'S RECOMMENDATIONS AND AS SHOWN ON THE DRAWINGS.
   - B. INSTALL GEOTEXTILE IN ACCORDANCE WITH MNDOT STANDARD SPECIFICATION 2511.3.B.2. INSTALL GEOTEXTILE TO THE LINES AND GRADES SHOWN ON THE DRAWINGS AND AS DIRECTED BY THE OWNER'S REPRESENTATIVE.
   - C. IF GRANULAR FILTER IS USED, INSTALL IN ACCORDANCE WITH MNDOT STANDARD SPECIFICATION 2511.3.B.

3. CHAIN LINK FENCE WITH CONCRETE CURB
   - A. SUBMITTALS: PROVIDE MANUFACTURER'S INFORMATION ON ALL COMPONENTS.
   - B. ALL MATERIAL SHALL BE IN ACCORDANCE WITH THE RESPECTIVE MNDOT SPECIFICATIONS AS FOLLOWS:
     1) FENCE WIRE - MNDOT 3376.COLOR: BLACK, COATED, OR STANDARD GALVANIZED, PER PLANS
     2) FENCE POSTS: COLOR: BLACK, COATED, OR STANDARD GALVANIZED, PER PLANS
     3) STRUCTURAL STEEL - MNDOT 3406.
     4) CONCRETE - MNDOT 2461 (GRADE B, TYPE 3).
   - C. ALL ACCESSORIES SHALL BE IN ACCORDANCE WITH THE RESPECTIVE MNDOT SPECIFICATIONS AS FOLLOWS:
     1) HARDWARE, FITTINGS AND FENCE FABRIC SHALL BE GALVANIZED STEEL - MNDOT 3406: PROVIDE HOT-DIPPED ZINC GALVANIZING.
     2) ELECTRICAL GROUND ROD:
        A) COPPER COATED STEEL ROD.
        B) MINIMUM NOMINAL DIAMETER = 5/8 INCH.
        C) MINIMUM LENGTH = 8 FEET.
     3) TOP AND BOTTOM RAIL: 1-5/8 INCH DIAMETER.
     4) TERMINAL POSTS: 2-1/2 INCH DIAMETER.
     5) LINE POSTS: 2 INCH DIAMETER.
   - D. PREPARATION
     1) REMOVE ALL BRUSH, TREES AND DEBRIS ALONG THE PROPOSED FENCE ALIGNMENT.
     3) PROVIDE A SMOOTH GROUND PROFILE ALONG THE PROPOSED ALIGNMENT.
   - E. INSTALLATION
     1) INSTALL THE FENCE BOTTOM PARALLEL WITH THE GROUND PROFILE. NO GAP GREATER THAN 6" AT BOTTOM OF FENCE.
     2) POST INSTALLATION:
        A) INSTALL POSTS IN THE LOCATIONS SHOWN ON THE PLANS.
        B) REPLACE POSTS THAT ARE DAMAGED DURING INSTALLATION.
        C) SET POSTS PLUMB ON FLAT AREAS.
        D) SET POSTS PERPENDICULAR TO THE GROUND ON SLOPES GREATER THAN 6 PERCENT.
        E) BACKFILL AND COMPACT THE ANNULAR SPACE IN PRE-BORED HOLES IN LAYERS USING EXCAVATED MATERIALS.
        F) CONCRETE ANCHORAGE OF POSTS:
           1) PREVENT CONTAMINATION OF CONCRETE DURING PLACEMENT.
           2) THOROUGHLY COMPACT CONCRETE AROUND POSTS.
           3) ALLOW CONCRETE TO CURE FOR A MINIMUM OF 3 DAYS PRIOR TO WIRE INSTALLATION.
        G) SET METAL POSTS FOR CHAIN-LINK 4 FEET INTO CONCRETE FOOTING.
     3) WIRE INSTALLATION:
        A) INSTALL AND TIGHTEN WIRE IN ACCORDANCE WITH THE MANUFACTURER'S RECOMMENDATION.
     4) CHAIN LINK FABRIC:
        A) PLACE FABRIC IN CONTINUOUS RUNS BETWEEN CORNER, END AND GATE POSTS.
        B) INSTALL THE FABRIC ON THE OUTSIDE OF THE LINE POSTS.
        C) THREAD A STRETCHER BAR THROUGH THE LOOPS AT ALL FABRIC ENDS AND FASTEN TO THE POSTS WITH CLAMPS.
     5) ELECTRICAL GROUNDS:
        A) INSTALL GROUND RODS IN THE LOCATIONS STAKED BY THE ENGINEER.
        B) DRIVE GROUND RODS FLUSH WITH THE SURFACE.
        C) INSTALL RODS DIRECTLY BELOW OR ADJACENT TO THE FENCE WIRE.
        D) CONNECT RODS TO THE FENCE WIRE WITH A SOLID NO. 6 GAGE COPPER WIRE.
        E) ATTACH GROUND WIRE TO THE ROD AND FENCE WITH AN APPROVED METAL POSTS

4. GRAVITY BOULDER WALL AND RIPRAP
   - A. RIPRAP SHALL BE IN ACCORDANCE WITH MNDOT STANDARD SPECIFICATION 3601 AND SHALL BE FIELD-STONE RIPRAP. RIPRAP SHALL BE OF THE TYPE AND SIZE SHOWN ON THE DRAWINGS. ALL RIPRAP SHALL BE INSTALLED OVER MNDOT 3733 TYPE V GEOTEXTILE FABRIC OR MNDOT 3601.3.B TABLE 3601-2 GRANULAR FILTER MATERIAL AS SHOWN ON THE DRAWINGS.
   - B. INSTALL RIPRAP IN ACCORDANCE WITH MNDOT STANDARD SPECIFICATION 2511.3.C. INSTALL RIPRAP TO THE LINES AND GRADES SHOWN ON THE DRAWINGS AND AS DIRECTED BY THE OWNER'S REPRESENTATIVE.

5. STORM MANHOLES, CATCH BASINS, STRUCTURES, FRAMES AND CASTINGS
   - A. PRECAST CONCRETE CATCH BASINS AND MANHOLES SHALL BE PRECAST CONCRETE CONFORMING TO THE REQUIREMENTS OF AASHTO M199, MN/DOT STANDARD SPECIFICATIONS 2506 AND 3622 AND MN/DOT STANDARD PLATES. PRECAST CONCRETE MANHOLES AND CATCH BASINS SHALL BE OF THE TYPE AND DIMENSIONS SHOWN ON THE DRAWINGS.
   - B. ANY STRUCTURE GREATER THAN FOUR (4) FEET DEEP FROM INVERT TO SURFACE ELEVATION SHALL HAVE MANHOLE STEPS INCLUDED IN THE STRUCTURE.
   - C. ALL CASTING ASSEMBLIES SHALL CONFORM TO AASHTO M 105 FOR THE CLASS SPECIFIED AND THE CASTING SHALL BE SUPPLIED BY A CERTIFIED FOUNDRY APPROVED BY THE STATE OF MINNESOTA.
   - D. CASTING ASSEMBLIES SHALL CONFORM TO THE REQUIREMENTS OF MNDOT STANDARD SPECIFICATION 3321.
   - E. FRAMES AND CASTINGS SHALL BE THE SIZE AND STYLE AS SHOWN ON THE DRAWINGS AND IN ACCORDANCE WITH CITY OF SAINT PAUL STANDARD SPECIFICATIONS.
   - F. ALL BEDDING AND BACKFILL SHALL BE IN ACCORDANCE WITH THE MANUFACTURER'S RECOMMENDATIONS AND AS SHOWN ON THE DRAWINGS.
   - G. G. ALL STRUCTURES IN THE SAINT PAUL PUBLIC ROADWAY RIGHT-OF-WAY MUST CONFORM TO CITY OF SAINT PAUL STANDARD PLATES/DETAILS.

   GENERAL INSTALLATION:

   - H. INSTALLATION OF STORM SEWER PIPES SHALL BE IN ACCORDANCE WITH MNDOT STANDARD SPECIFICATION 2501 FOR THE TYPE OF PIPE SPECIFIED AND AS AMENDED HEREIN.
   - I. INSTALLATION OF STORM MANHOLES AND CATCH BASINS SHALL BE IN ACCORDANCE WITH MNDOT STANDARD SPECIFICATION 2506 FOR THE TYPE OF STRUCTURE SPECIFIED AND AS AMENDED HEREIN.
   - J. INSTALL ALL STORM SEWER PIPES IN ACCORDANCE WITH THE PIPE MANUFACTURER'S RECOMMENDATIONS AND TO THE LINES AND GRADES SHOWN ON THE DRAWINGS.
   - K. FOLLOW MINIMUM COVER AND MAXIMUM COVER REQUIREMENTS PER THE PIPE MANUFACTURER'S RECOMMENDATIONS.
   - L. G. INSTALLATION OF STRUCTURES IN THE SAINT PAUL PUBLIC ROADWAY RIGHT-OF-WAY MUST BE PEFORMED BY A CITY-APPROVED CONTRACTOR.

   CONNECT TO STORM MANHOLE OR CATCH BASIN

   - A. CONTRACTOR SHALL USE PREFORMED OPENINGS OR CORE DRILL (BORE) NEW CONNECTIONS INTO PRECAST CONCRETE STRUCTURES WHEN POSSIBLE.
   - B. CONTRACTOR SHALL INSTALL ASTM C923 RESILIENT CONNECTORS WATERTIGHT BOOTS FOR PIPE CONNECTIONS IN CORED HOLES. WATERTIGHT BOOTS SHALL BE KOR-N-SEAL, A-LOK, OR OWNER'S REPRESENTATIVE APPROVED EQUAL.
   - C. WATERTIGHT BOOTS SHALL BE INCIDENTAL TO THE COST OF THE CONNECTION TO EXISTING STRUCTURE.
   - D. CONNECTIONS MADE INTO MANHOLES THAT ARE NOT CORED; PIPES SHALL BE MORTARED IN PLACE WITH A NON-SHRINKING GROUT AND HAVE THE PROPER ASTM C923 RESILIENT CONNECTORS WATER STOP INSTALLED ONTO THE PIPE.
   - E. INSTALL FRAME AND CASTING AT STORM MANHOLE OR CATCH BASIN
   - F. INSTALLATION OF THE CATCH BASIN AND GRATE SHALL BE DONE IN ACCORDANCE WITH THE MANUFACTURER'S RECOMMENDATIONS AND MN/DOT STANDARD SPECIFICATIONS, TO THE LINES AND GRADES AS SHOWN ON THE DRAWINGS.
   - G. WHERE FRAMES AND CASTINGS ARE INSTALLED AT PAVEMENT OR CURB AND GUTTER, THE FRAME SHALL BE PERMANENTLY SET IN CONCRETE. PRIOR TO PERMANENTLY SETTING FRAME, COORDINATE WITH OWNER'S REPRESENTATIVE TO ENSURE RIM ELEVATION AND LOCATION COINCIDES WITH PAVING, CURB, GUTTER PLANS, AND ELEVATIONS.

ISSUE FOR BID
AND PERMITTING

NO.	BY	CHK.	APP.	DATE	REVISION DESCRIPTION

I HEREBY CERTIFY THAT THIS PLAN, SPECIFICATION, OR REPORT WAS PREPARED BY ME OR UNDER MY DIRECT SUPERVISION AND THAT I AM A DULY LICENSED PROFESSIONAL ENGINEER UNDER THE LAWS OF THE STATE OF MINNESOTA.

PRINTED NAME MATTHEW R. METZGER

SIGNATURE

DATE 02/03/2025 LICENSE # 47651

CLIENT							
PERMIT				01/24			
BID				02/25			
CONSTRUCTION							
RECORD							
RELEASED TO/FOR	A	B	C	0	1	2	3
	DATE RELEASED						

BARR

Corporate Headquarters:
Minneapolis, Minnesota
Ph: 1-800-632-2277

Project Office:
BARR ENGINEERING CO.
4300 MARKETPOINTE DRIVE
SUITE 200
MINNEAPOLIS, MN 55435
Ph: 1-800-632-2277
Fax: (952) 832-2601
www.barr.com

Scale	AS SHOWN
Date	02/03/2025
Drawn	MRM/AMP3
Checked	MRM/MDB3
Designed	MRM/MDB3
Approved	MRM

RAMSEY-WASHINGTON METRO WATERSHED DISTRICT

ROOSEVELT HOMES PHASE 3
SAINT PAUL, MINNESOTA

-

TECHNICAL SPECIFICATIONS

BARR PROJECT No.	23621477.03
CLIENT PROJECT No.	
DWG. No.	G-1.1
REV. No.	0

CADD USER: ANDREW M. PAPKE-LARSON FILE: M:\DESIGN\23621477.01\PHASE 2 CAD FILES\23621477_SHEET_G1.1_TECHNICAL SPECIFICATIONS.DWG PLOT SCALE: 1:2 PLOT DATE: 2/3/2025 1:51 PM

TECHNICAL SPECIFICATIONS CONTINUED

FILL PLACEMENT AROUND STORM SEWER PIPES AND MANHOLE STRUCTURES

A. THE CONTRACTOR SHALL NOTIFY ENGINEER BEFORE PLACING FILL AROUND PIPES AND MANHOLE STRUCTURES.

B. THE CONTRACTOR SHALL USE THE TYPE OF MATERIAL IDENTIFIED ON THE DRAWINGS AS BEDDING AND BACKFILL FOR THE VARIOUS TYPES OF PIPES.

C. DO NOT USE FROZEN FILL MATERIAL OR PLACE ON FROZEN SUBGRADE.

D. ALL ZONES OF TRENCH BACKFILL MATERIAL SHALL BE PLACED IN STRICT ACCORDANCE WITH THE PIPE MANUFACTURER'S SPECIFICATIONS. SOME TRENCH BACKFILL BORROW MATERIAL MAY BE REQUIRED TO MEET MANUFACTURER'S SPECIFICATIONS. ALL TRENCH BACKFILL BORROW MATERIAL IS TO BE CONSIDERED INCIDENTAL TO THE PIPE INSTALLATION.

E. PLACE FILL MATERIAL IN MAXIMUM 4 INCH LOOSE LIFTS UNDER PIPE HAUNCHES AND COMPACT TO AT LEAST 95% OF MAXIMUM STANDARD PROCTOR DENSITY, ASTM D 698, WITH HAND OPERATED VIBRATING COMPACTOR UNTIL FIRMLY COMPACTED TO PIPE SPRING LINE AND IN STRICT ACCORDANCE WITH THE PIPE MANUFACTURER'S SPECIFICATIONS.

F. NO PIPE SHALL BE LAID IN WATER NOR WHEN THE TRENCH BEDDING CONDITIONS ARE UNSUITABLE, UNSTABLE, AND OR UNCONSOLIDATED.

G. FURNISH ALL EXCAVATIONS IN CONFORMANCE WITH APPLICABLE OSHA LAWS AND REGULATIONS INCLUDING PROPER EGRESS, SLOPING AND BENCHING, EVALUATION BY A COMPETENT PERSON, HAZARDOUS ATMOSPHERES, AND TRAINING. DESIGN OF SLOPES, SHORING AND BRACING IS BY CONTRACTOR.

H. PIPE AND STRUCTURE BASE PREPARATION

I. IN GENERAL, PIPE BASE PREPARATION WILL BE PLACED AND COMPACTED WITH THE TYPE AND THICKNESS OF MATERIAL SHOWN ON THE DRAWINGS.

J. IF FIELD CONDITIONS IDENTIFY UNSUITABLE MATERIAL ENCOUNTERED AT THE PIPE SUBBASE ELEVATION OR STRUCTURE SUBBASE ELEVATION, THE CONTRACTOR AT THE DISCRETION OF THE ENGINEER, WILL IMPLEMENT A SUBBASE STABILIZATION BY SUBCUTTING UNSUITABLE SUBGRADE, INSTALL MNDOT TYPE V GEOTEXTILE FABRIC AND BACKFILL THE SUBCUT WITH COMPACTED MNDOT 3149.2.D2 STRUCTURAL BACKFILL. USE OF THE STABILIZATION TECHNIQUE WILL BE EVALUATED AT THE TIME EACH STORM WATER DRAIN/STRUCTURE IS TO BE INSTALLED AND ITS SUBCUT DEPTH AND USE WILL BE DETERMINED IN THE FIELD BY THE OWNER'S REPRESENTATIVE AND THE ENGINEER.

K. BACKFILLING IN PIPE ZONE

L. PLACE GRANULAR BUILDING MATERIAL AS SHOWN IN THE DRAWINGS. DEPOSIT IN THE TRENCH SIMULTANEOUSLY ON BOTH SIDES OF THE PIPE FOR THE FULL WIDTH OF THE TRENCH TO A MINIMUM HEIGHT OF TWELVE (12) INCHES ABOVE THE TOP OF THE PIPE. THE MATERIAL SHALL BE SHOVEL PLACED AND HAND TAMPED TO FILL COMPLETELY ALL SPACES UNDER AND ADJACENT TO THE PIPE. THE MATERIAL SHALL BE COMPACTED WITH A "JUMPING JACK" OR "TURTLE" TYPE COMPACTOR.

M. BACKFILLING OF PERFORATED DRAIN PIPE SHALL BE WITH ANGULAR ROCK IN THE TRENCH SIMULTANEOUSLY ON BOTH SIDES OF THE PIPE FOR THE FULL WIDTH OF THE TRENCH TO A MINIMUM HEIGHT OF TWELVE (12) INCHES ABOVE THE TOP OF THE PIPE. THE MATERIAL SHALL BE SHOVEL PLACED AND HAND TAMPED TO FILL COMPLETELY ALL SPACES UNDER AND ADJACENT TO THE PIPE.

N. BACKFILLING ABOVE PIPE ZONE

O. SUCCEEDING LAYERS OF BACKFILL IN NON-PAVEMENT AREAS, FROM TWELVE (12) INCHES ABOVE THE PIPE TO THE SURFACE MAY CONTAIN COARSE MATERIALS, BUT SHALL BE FREE FROM LARGE PIECES OF ROCK, FROZEN MATERIALS, CONCRETE, BLACKTOP, WOOD, ROOTS, STUMPS, SOD, RUBBISH AND OTHER SIMILAR ARTICLES WHOSE PRESENCE IN THE BACKFILL, IN THE OPINION OF ENGINEER, WOULD CAUSE EXCESSIVE SETTLEMENT OF THE TRENCH OR DAMAGE TO THE PIPE.

P. IF, IN THE OPINION OF ENGINEER, THE NATIVE TRENCH MATERIAL DOES NOT MEET THE REQUIREMENTS FOR GRANULAR MATERIALS SPECIFIED HEREIN, IT SHALL BE CONSIDERED SURPLUS MATERIAL AND DISPOSED. CONTRACTOR, DURING THE EXCAVATION OPERATIONS, SHALL MAKE A REASONABLE ATTEMPT TO SEGREGATE ALL UNDESIRABLE MATERIALS ENCOUNTERED FROM SUITABLE MATERIALS. ANY ADDITIONAL MATERIAL NEEDED FOR BACKFILLING SHALL BE FURNISHED AND INSTALLED BY CONTRACTOR.

Q. ALL TRENCH AREAS BEYOND EXISTING OR PROPOSED ROADBEDS AND DRIVEWAYS SHALL BE COMPACTED TO ACHIEVE A MINIMUM OF AT LEAST 95 PERCENT MAXIMUM STANDARD PROCTOR DRY DENSITY (ASTM D 698). COMPACTION SHALL OCCUR IN MAXIMUM LOOSE LIFT THICKNESSES OF 6 INCHES. THE TOP 5-FEET UNDER STRUCTURES AND PAVEMENT SHALL BE COMPACTED TO AT LEAST 100 PERCENT OF STANDARD PROCTOR MAXIMUM DRY DENSITY.

R. BACKFILLING WITHIN VEGETATED GREEN SPACE AND OUTSIDE OF PAVED AREAS AND OUTSIDE OF STRUCTURES SHALL BE PERFORMED IN LIFTS AND USE SUITABLE COMPACTION EQUIPMENT TO PROVIDE AT MINIMUM 90 PERCENT OF STANDARD PROCTOR MAXIMUM DRY DENSITY.

S. IT SHALL BE CONTRACTOR'S RESPONSIBILITY TO DETERMINE THE PROPER COMPACTING EQUIPMENT AND METHODS REQUIRED TO ACHIEVE THE REQUIRED DENSITY.

T. BACKFILLING OF PERFORATED DRAIN PIPE ABOVE THE PIPE ZONE SHALL BE WITH ANGULAR ROCK FOR THE FULL WIDTH OF THE TRENCH. THE MATERIAL SHALL BE SHOVELED IN PLACED AND HAND TAMPED TO FILL COMPLETELY ALL SPACES AND VOID IN THE TRENCH ABOVE THE PIPE.

U. TESTS TO DETERMINE THE COMPACTED DENSITY OF THE BACKFILL MAY BE PERFORMED BY ENGINEER.

6. STRUCTURE AND STORM SEWER PIPE BEDDING AND GRANULAR ENCASEMENT

A. ALL BEDDING AND BACKFILL SHALL BE IN ACCORDANCE WITH THE MANUFACTURER'S RECOMMENDATIONS AND AS SHOWN ON THE DRAWINGS, IN ACCORDANCE WITH MNDOT STANDARD SPECIFICATIONS.

7. ALL TOPSOIL WILL BE SALVAGED AND RETAINED ON SITE FOR USE IN ALL PLANNING AREAS.

A. SALVAGED TOPSOIL MUST MEET THE MN/DOT STANDARD SPECIFICATION 3877.2.B. IF NOT A SOIL AMENDMENT SHALL BE ADDED, SEE DETAIL 5 ON SHEET C-3.0. THE SOIL AMENDMENT, COMPOST SHALL BE IN ACCORDANCE WITH MN/DOT STANDARD SPECIFICATION 3890.2.B (GRADE 2 COMPOST). CONTRACTOR SHALL FURNISH IMPORTED TOPSOIL IF SALVAGED TOPSOIL IS UNAVAILABLE. IMPORTED TOPSOIL SHALL BE IN ACCORDANCE WITH MN/DOT STANDARD SPECIFICATION 3877.2.B.

8. EROSION CONTROL BLANKET SHALL MEET THE REQUIREMENTS OF MNDOT STANDARD SPECIFICATION 3885 FOR ROLLED EROSION CONTROL PRODUCTS AND BE CATEGORY 3N WOOD FIBER 2S NATURAL WOOD FIBER BLANKET WITH 100% BIODEGRADABLE NETTING AND STITCHING.

REMOVALS NOTES:

1. EXCESS EXCAVATED MATERIAL AND UNSUITABLE MATERIAL SHALL BECOME THE PROPERTY OF THE CONTRACTOR AND DISPOSED OF OFFSITE.
2. REMOVE ALL SPECIFIED TREES, SHRUBS, PLANTS, AND SOD PRIOR TO EXCAVATION AND DISPOSE OF OFFSITE AT A COMPOST FACILITY.

EXCAVATION NOTES:

1. THE CONTRACTOR SHALL CONSTRUCT BASINS TO THE DIMENSIONS SHOWN ON THE PLANS.
2. IN ORDER TO MAXIMIZE THE INFILTRATION RATE OF THE SOILS, THE CONTRACTOR SHALL MAKE EVERY EFFORT POSSIBLE TO AVOID COMPACTION OF SUBOILS IN THE BASINS.
3. THE ELEVATIONS ON THE PLANS INDICATE FINISHED GRADES OF THE BASINS.
4. GRADING TOLERANCES FOR SUB CUT:

   VERTICAL +/- 0.1 FEET

   HORIZONTAL +/- 1.0 FEET
5. THE CONTRACTOR SHALL SURVEY THE BOTTOM ELEVATION OF THE BASIN UPON COMPLETION OF THE SUB CUT AND PROVIDE THE SURVEY INFORMATION TO THE ENGINEER AND MAKE AVAILABLE FOR OBSERVATION THE EXCAVATED AREA FOR THE OWNER'S REPRESENTATIVE AND ENGINEER TO OBSERVE SUBSOILS. THE ENGINEER SHALL NOTIFY THE CONTRACTOR OF AREAS THAT DO NOT MEET THE SPECIFICATIONS AND TOLERANCES SPECIFIED. THE CONTRACTOR SHALL CORRECT THE WORK PRIOR TO MOVING ON TO THE NEXT STEP.
6. DO NOT USE FROZEN FILL MATERIAL OR PLACE ON FROZEN SUBGRADE.
7. FURNISH ALL EXCAVATIONS IN CONFORMANCE WITH APPLICABLE OSHA LAWS AND REGULATIONS INCLUDING PROPER EGRESS, SLOPING AND BENCHING, EVALUATION BY A COMPETENT PERSON, HAZARDOUS ATMOSPHERES, AND TRAINING. DESIGN OF SLOPES, SHORING AND BRACING IS BY CONTRACTOR.

FIELD QUALITY CONTROL:

THE CONTRACTOR SHALL ESTABLISH AND MAINTAIN QUALITY CONTROL FOR WORK UNDER THIS SECTION TO ASSURE COMPLIANCE WITH CONTRACT REQUIREMENTS AND MAINTAIN RECORDS OF HIS QUALITY CONTROL FOR ALL CONSTRUCTION OPERATIONS.

THE CONTRACTOR SHALL ESTABLISH AND MAINTAIN QUALITY CONTROL FOR WORK UNDER THIS SECTION TO ASSURE COMPLIANCE WITH CONTRACT REQUIREMENTS AND MAINTAIN RECORDS OF HIS QUALITY CONTROL FOR ALL CONSTRUCTION OPERATIONS. IN ADDITION, THE CONTRACTOR SHALL COORDINATE, VERIFY AND CHECK THE PRECAST CONCRETE.

PIPE, PIPE APPURTENANCES, MANHOLE OR CATCH BASIN INSTALLATION WILL BE SUBJECT TO REJECTION FOR ANY OF THE FOLLOWING REASONS.

1. FAILURE TO CONFORM TO THE SPECIFICATIONS, WITH REGARD TO:
   A. COMPACTION UNDER AND AROUND THE PIPE OR STRUCTURE.
   B. LINE AND GRADE (+ OR - 0.5 FOOT HORIZONTALLY, + OR - 0.10 FEET VERTICALLY)
2. FRACTURES OR CRACKS PASSING THROUGH BARREL WALL OR SOCKET.
3. CRACKS WHICH, IN THE OPINION OF OWNER'S REPRESENTATIVE, MAY IMPAIR STRENGTH, DURABILITY, OR SERVICEABILITY OF PIPE OR STRUCTURE.
4. DEFECTS INDICATING IMPROPER MOLDING
5. DAMAGED ENDS WHERE SUCH DAMAGE WOULD PREVENT MAKING A SATISFACTORY JOINT.
6. DAMAGED GASKETED COUPLER SYSTEM.
7. DAMAGED UNDER DRAIN PIPING SYSTEM OR CONNECTIONS.
8. DAMAGED MANHOLE OR CATCH BASIN STRUCTURES.

END OF SECTION

CITY OF SAINT PAUL NOTES:

1. WATER: ALL WATER SERVICE VALVE BOXES WITHIN CONSTRUCTION AREA MUST BE EXPOSED AND BROUGHT TO FINISH GRADE UPON COMPLETION OF CONSTRUCTION.

1.1. ENSURE ANY FIRE DEPARTMENT CONNECTIONS FOR ANY SURROUNDING BUILDINGS REMAIN ACCESSIBLE DURING THE CONSTRUCTION PERIOD.

2. STREET LIGHTS: THE CONTRACTOR SHALL CONTACT MIKE LUSIAN, GENERAL FOREMAN, LIGHTING - SIGNAL MAINTENANCE. (651-266-9780). IF REMOVAL OR RELOCATION OF EXISTING FACILITIES IS REQUIRED OR IN THE EVENT OF DAMAGE TO THE LIGHTING OR SIGNAL UTILITIES, THE CONTRACTOR SHALL ASSUME RESPONSIBILITY (AND RELATED COSTS) FOR ANY DAMAGE OR RELOCATIONS.

3. SURVEY MONUMENTS: CARE MUST BE TAKEN DURING CONSTRUCTION AND EXCAVATION TO PROTECT ANY SURVEY MONUMENTS AND/OR PROPERTY IRONS. CALL KEVIN KALEY OF PUBLIC WORKS SURVEYING (651-266-6075) TO ANSWER ANY QUESTIONS.

4. SEWERS: ANY EXISTING SANITARY SEWER SERVICES TO THE SITE MUST BE CUT OFF AT THE PROPERTY LINE (PERMIT NUMBERS: 55759, 13093, 38766, 1203). CONTACT: ANCA SIMA 651-266-6237.

4.1. SANITARY AND/OR STORM SEWER SERVICE PASSING WITHIN 10 FEET OF THE BUILDING ARE GOVERNED BY THE MN PLUMBING CODE. SPECIFICATION FOR PIPE MATERIAL SELECTION AND NOTES FOR REQUIRED AIR TEST OF THE PIPING, COMPLIANT WITH MN STATE PLUMBING CODE 4714 SECTION 1109.0, MUST BE SHOWN ON THE PLAN.

4.2. CONTACT THE CITY OF SAINT PAUL DEPARTMENT OF PUBLIC WORKS SEWER DIVISION FOR QUESTIONS, PERMITS, FEES, INSPECTIONS, SPECIFICATIONS, PLANS, OR INFORMATION THAT MAY BE REQUIRED FOR SEWER AND STORM PIPING WORK PERFORMED OUTSIDE THE BUILDING.

4.3. PRIOR TO DEMOLITION OF A BUILDING CONNECTED TO THE CITY'S STORM SEWER SYSTEM, ALL STORM SERVICES SHALL BE ABANDONED BY UNCOVERING THEM ON PRIVATE PROPERTY WITHIN FOUR FEET OF THE PROPERTY LINE, AND THEN SEALING THEM WATERTIGHT WITH APPROVED BULKHEAD. BEFORE OR AFTER ANY STORM SEWER SERVICE IS ABANDONED, THE PROPERTY OWNER IS RESPONSIBLE FOR ENSURING THAT ALL DRAINAGE STRUCTURES ON THE PRIVATE PROPERTY CAN ADEQUATELY HANDLE ALL DRAINAGE ON OR COMING OUT OF THE PROPERTY.

4.4. IN NO CASE SHALL WATER FROM ROOFS OR ANY BUILDING ROOF DRAINAGE BE ALLOWED TO FLOW UPON THE PUBLIC SIDEWALK. MPC 4714.1101.2

5. SEWER REPAIR PERMIT: PLUMBING CONTRACTOR TO OBTAIN REPAIR PERMITS FROM PUBLIC WORKS FOR PROPOSED MODIFICATION TO THE EXISTING STORM SEWER CONNECTIONS. CALL ST PAUL PW PERMIT DESK (651-266-6234) FOR INFORMATION ON OBTAINING THIS PERMIT. (A94737A)
6. PERMITS: TREES: REMOVING OR PLANTING TREES IN THE BOULEVARD REQUIRES A PERMIT FROM THE CITY FORESTER (651-632-2436).
7. PERMITS: OBSTRUCTION AND EXCAVATION PERMITS: CONTRACTOR SHALL CONTACT PUBLIC WORKS RIGHT-OF-WAY SERVICE DESK AT 651-266-6151 PRIOR TO CONSTRUCTION. IT IS STRONGLY RECOMMENDED THAT CONTRACTORS CALL FOR COST ESTIMATES PRIOR TO BIDDING TO OBTAIN ACCURATE COST ESTIMATES.
8. PERMITS: OBSTRUCTION PERMITS: CONTRACTOR MUST OBTAIN AN OBSTRUCTION PERMIT IF CONSTRUCTION (INCLUDING ALL SILT FENCES) WILL BLOCK CITY STREETS, SIDEWALKS OR ALLEYS, OR IF DRIVING OVER CURBS.
9. PERMITS: EXCAVATION PERMITS: ALL DIGGING IN THE PUBLIC RIGHT-OF-WAY REQUIRES AN EXCAVATION PERMIT. IF THE PROPOSED BUILDING IS CLOSE TO THE RIGHT-OF-WAY, AND EXCAVATING INTO THE RIGHT-OF-WAY IS NEEDED TO FACILITATE CONSTRUCTION, CONTACT THE UTILITY INSPECTOR.
10. PERMITS: FAILURE TO SECURE PERMITS: FAILURE TO SECURE OBSTRUCTION PERMITS OR EXCAVATION PERMITS WILL RESULT IN A DOUBLE-PERMIT FEE AND OTHER FEES REQUIRED UNDER CITY OF ST. PAUL LEGISLATIVE CODES.
11. REQUIREMENTS TO WORK IN THE PUBLIC RIGHT-OF-WAY: ALL UTILITIES AND CONTRACTORS WORKING IN THE PUBLIC RIGHT-OF-WAY MUST BE REGISTERED, INSURED AND BONDED, AS RECOGNIZED BY THE PUBLIC WORKS SERVICE DESK 651-266-6151.
12. GOPHER STATE ONE-CALL (PRIVATE SEWER SERVICES IN SAINT PAUL): ALL CONTRACTORS AND SUB-CONTRACTORS ARE RESPONSIBLE FOR ALL REASONABLE EFFORTS TO IDENTIFY UNDERGROUND FACILITIES (INCLUDING PRIVATE SEWER SERVICE LATERALS) USING INFORMATION PROVIDED THROUGH SAINT PAUL PUBLIC WORKS SEWERS RECORD CENTER (OBTAIN ACCESS THROUGH PWSEWERSRECORDCENTER@CI.STPAUL.MN.US) AS WELL AS COMPLIANCE WITH ALL GSOC REQUIREMENTS SUCH AS POTHOLING ACTIVITIES TO VERIFY LOCATION IDENTIFICATION.
13. SIGNING: SIGNS REGULATING PARKING AND/OR TRAFFIC ON PRIVATE PROPERTY (OUTSIDE OF THE PUBLIC RIGHT-OF-WAY ROW) SHALL BE FURNISHED AND INSTALLED BY THE PROPERTY OWNER OR CONTRACTOR AT NO COST TO THE CITY OF ST. PAUL DEPARTMENT OF PUBLIC WORKS. REMOVAL OF EXISTING SIGNS WITHIN THE PUBLIC ROW THAT REGULATE TRAFFIC AND OR PARKING SHALL BE COMPLETED BY THE CITY AT THE EXPENSE OF THE DEVELOPMENT. ALL EQUIPMENT, MATERIALS, AND LABOR COSTS ASSOCIATED WITH THE CITY AFFECTING A COMPLETE SIGN INSTALLATION SHALL BE THE RESPONSIBILITY OF THE DEVELOPMENT. CONTACT CHRIS GULDEN OF PUBLIC WORKS 651-266-9778 TWO WEEKS IN ADVANCE OF NEEDED SIGN WORK.
14. STRIPING: STRIPING RESTORATION SHALL BE COMPLETED IMMEDIATELY FOLLOWING FINAL PAVEMENT RESTORATION. ROADWAY STRIPING IMPACTED BY THE WORK ZONE SHALL BE REPLACED IN-KIND AT NO COST TO THE ROAD AUTHORITY. IF THERE ARE QUESTIONS AS TO THE TYPE OF STRIPING MATERIAL TO BE USED, CONTACT CHRIS GULDEN (651-266-9778) IN THE CITY'S TRAFFIC OPERATIONS SECTION. IF THERE IS A DESIRE FOR THE CITY OF ST. PAUL PUBLIC WORKS DEPARTMENT TO COMPLETE PAVEMENT MARKING RESTORATION WORK, CONTACT CHRIS GULDEN OF PUBLIC WORKS TRAFFIC OPERATIONS FOR AN ESTIMATE. AT A MINIMUM, TWO WEEKS ADVANCE NOTICE SHALL BE PROVIDED FOR ANY STRIPING WORK REQUEST. IF ADVANCE NOTICE IS NOT PROVIDED, ANY ASSOCIATED PROJECT DELAYS, AND COSTS INCURRED RESULTING FROM SAID DELAYS, SHALL BE THE SOLE RESPONSIBILITY OF THE CONTRACTOR.

CITY OF SAINT PAUL NOTES: RIGHT-OF-WAY

1. RIGHT-OF-WAY: INSPECTION CONTACT: THE DEVELOPER SHALL CONTACT THE RIGHT-OF-WAY INSPECTOR TESHOME HAILEMARIAM, 651-238-0681 (TWO WEEKS PRIOR TO BEGINNING WORK) TO DISCUSS TRAFFIC CONTROL, PEDESTRIAN SAFETY AND COORDINATION OF ALL WORK IN THE PUBLIC RIGHT-OF-WAY. NOTE: IF A TWO WEEK NOTICE IS NOT PROVIDED TO THE CITY, ANY RESULTING DELAYS SHALL BE THE SOLE RESPONSIBILITY OF THE CONTRACTOR.
2. RIGHT OF WAY: SAFE WORK SITE REQUIREMENTS: CONTRACTOR SHALL PROVIDE A CONTINUOUS, ACCESSIBLE AND SAFE PEDESTRIAN WALKWAY THAT MEETS ADA AND MN MUTCD STANDARDS IF WORKING IN A SIDEWALK AREA. CONTRACTOR SHALL PROVIDE TRAFFIC CONTROL PER MN MUTCD REQUIREMENTS FOR WORK IN THE PUBLIC RIGHT-OF-WAY.
3. RIGHT OF WAY: NO PRIVATE FACILITIES IN THE RIGHT OF WAY: DEVELOPER IS STRICTLY PROHIBITED FROM INSTALLING PRIVATE ELECTRICAL WIRING, CONDUIT, RECEPTACLES AND/OR LIGHTING IN THE CITY'S RIGHT-OF-WAY. THIS INCLUDES STUBBING CONDUIT OR CABLE INTO THE PUBLIC RIGHT-OF-WAY TO ACCOMMODATE UTILITY FEEDS TO THE SITE. COORDINATE WITH EACH UTILITY PRIOR TO CONSTRUCTION TO DETERMINE FEED POINTS INTO THE PROPERTY. UTILITIES ARE RESPONSIBLE FOR SECURING EXCAVATION PERMITS TO RUN THEIR SERVICE INTO A SITE, AND (WHERE REQUIRED) SUBMITTING PLANS FOR REVIEW BY THE PUBLIC WORKS UTILITY REVIEW COMMITTEE.
4. RIGHT OF WAY: PAVEMENT RESTORATION: PAVEMENT RESTORATION SHALL BE COMPLETED BY THE ST. PAUL PUBLIC WORKS STREET MAINTENANCE DIVISION. ALL RELATED COSTS ARE THE RESPONSIBILITY OF THE DEVELOPER/CONTRACTOR. CONTACT KEVIN NELSON AT 651-266-9700 FOR ESTIMATE OF COSTS FOR PAVEMENT RESTORATION.
5. ADJACENT STREETS AND ALLEYS MUST BE SWEPT TO KEEP THEM FREE OF SEDIMENT. CONTRACTOR MUST MONITOR CONDITIONS AND SWEEP AS NEEDED OR WITHIN 24 HOURS OF NOTICE BY THE CITY.

CITY OF SAINT PAUL NOTES: SIDEWALKS

1. ALL WORK ON CURBS, DRIVEWAYS AND SIDEWALKS WITHIN THE PUBLIC RIGHT-OF-WAY MUST BE DONE TO CITY STANDARDS AND SPECIFICATIONS BY A LICENSED AND BONDED CONTRACTOR UNDER A PERMIT FROM PUBLIC WORKS SIDEWALK SECTION (651-266-6120). SIDEWALK GRADES MUST BE CARRIED ACROSS DRIVEWAYS AS SHOWN ON THE DRAWINGS.
2. RESTORATION OF ASPHALT AND CONCRETE PAVEMENTS ARE PERFORMED BY THE PUBLIC WORKS STREET MAINTENANCE DIVISION. THE CONTRACTOR IS RESPONSIBLE FOR PAYMENT TO THE CITY FOR THE COST OF THESE RESTORATIONS. THE CONTRACTOR SHALL CONTACT PUBLIC WORKS STREET MAINTENANCE TO SET UP A WORK ORDER PRIOR TO BEGINNING ANY REMOVALS IN THE STREET AT 651-292-6600. PROCEDURES AND UNIT COSTS ARE FOUND IN STREET MAINTENANCES "GENERAL REQUIREMENTS - ALL RESTORATIONS" AND ARE AVAILABLE AT THE PERMIT OFFICE.
3. ACCESSIBLE PEDESTRIAN CURB RAMPS SHALL CONFORM TO MNDOT STANDARD PLAN 5-297.250, DATED 11-04-2021 OR MOST CURRENT VERSION, AND MUST BE AMERICANS WITH DISABILITIES ACT (ADA) ACCESSIBILITY STANDARDS COMPLIANT.
4. ACCESSIBLE SIDEWALKS SHALL CONFORM TO MNDOT STANDARD PLAN 5-297.254, DATED 11-04-2021 OR MOST CURRENT VERSION, AND MUST BE AMERICANS WITH DISABILITIES ACT (ADA) ACCESSIBILITY STANDARDS COMPLIANT.
5.

ISSUE FOR BID
AND PERMITTING

NO.	BY	CHK.	APP.	DATE	REVISION DESCRIPTION

I HEREBY CERTIFY THAT THIS PLAN, SPECIFICATION, OR REPORT WAS PREPARED BY ME OR UNDER MY DIRECT SUPERVISION AND THAT I AM A DULY LICENSED PROFESSIONAL ENGINEER UNDER THE LAWS OF THE STATE OF MINNESOTA.
PRINTED NAME MATTHEW R. METZGER
SIGNATURE
DATE 02/03/2025 LICENSE # 47651

CLIENT								
PERMIT				01/24				
BID				02/25				
CONSTRUCTION								
RECORD								
RELEASED TO/FOR	A	B	C	0	1	2	3	
	DATE RELEASED							

BARR
Corporate Headquarters:
Minneapolis, Minnesota
Ph: 1-800-632-2277

Project Office:
BARR ENGINEERING CO.
4300 MARKETPOINTE DRIVE
SUITE 200
MINNEAPOLIS, MN 55435
Ph: 1-800-632-2277
Fax: (952) 832-2601
www.barr.com

Scale	AS SHOWN
Date	02/03/2025
Drawn	MRM/AMP3
Checked	MRM/MDB3
Designed	MRM/MDB3
Approved	MRM

RAMSEY-WASHINGTON METRO WATERSHED DISTRICT

ROOSEVELT HOMES PHASE 3
SAINT PAUL, MINNESOTA

-
CITY OF SAINT PAUL NOTES

BARR PROJECT No. 23621477.03
CLIENT PROJECT No.
DWG. No. G-1.2
REV. No. 0

CADD USER: ANDREW M. PAPKE-LARSON FILE: M:\DESIGN\23621477.01\PHASE 2 CAD FILES\23621477_SHEET_G1-2_CITY OF SAINT PAUL NOTES.DWG PLOT SCALE: 1:2 PLOT DATE: 2/3/2025 1:54 PM

CADD USER: ANDREW M. PAPKE-LARSON FILE: M:\DESIGN\23621477.01\PHASE 2 CAD FILES\23621477_SHEET_C1-0_REMOVAL & EROSION CONTROL PLAN_NORTH FLUME & STORM PIPE.DWG PLOT SCALE: 1:2 PLOT DATE: 2/3/2025 1:47 PM

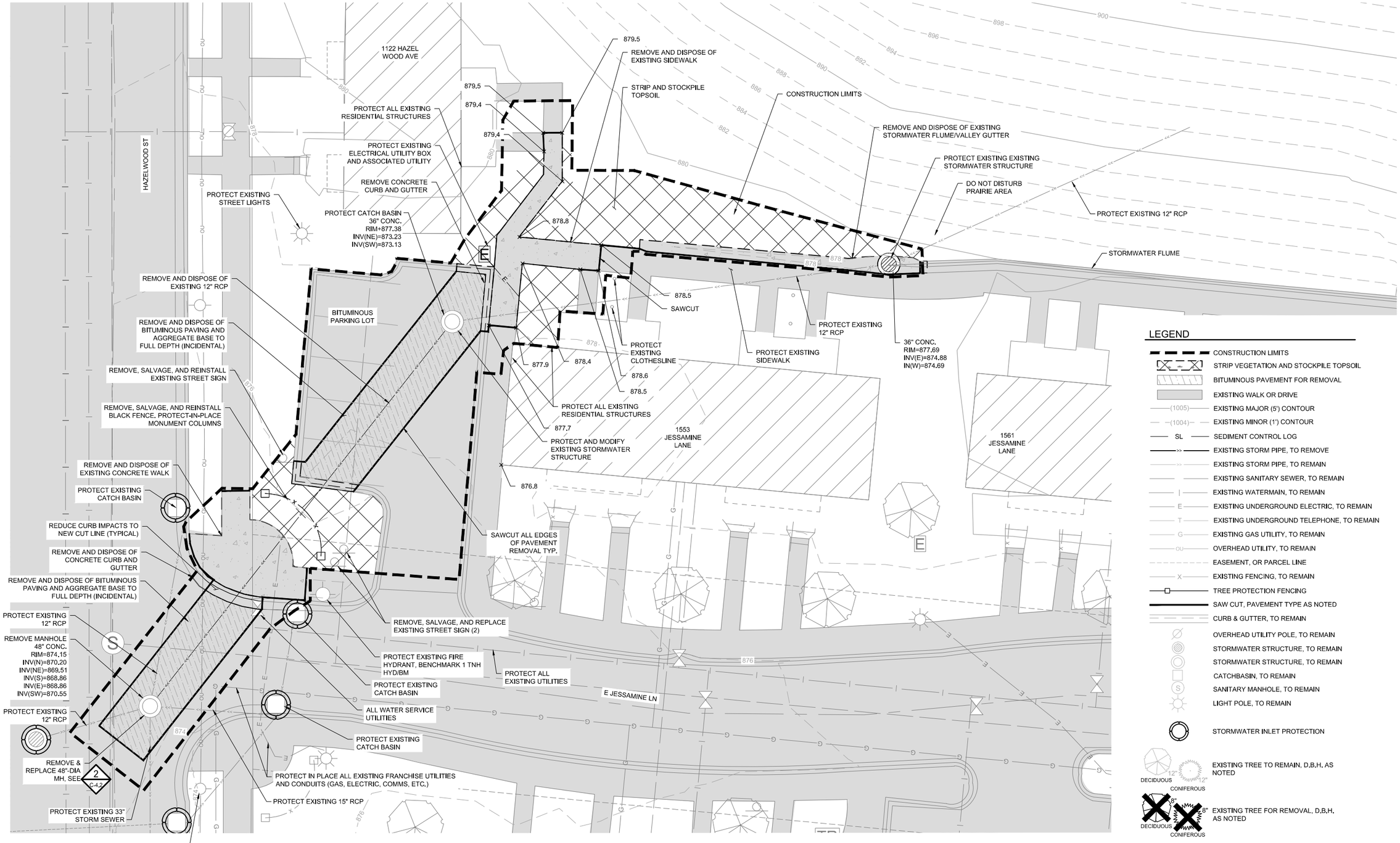

LEGEND

- CONSTRUCTION LIMITS
- STRIP VEGETATION AND STOCKPILE TOPSOIL
- BITUMINOUS PAVEMENT FOR REMOVAL
- EXISTING WALK OR DRIVE
- (1005) EXISTING MAJOR (5') CONTOUR
- (1004) EXISTING MINOR (1') CONTOUR
- SL SEDIMENT CONTROL LOG
- EXISTING STORM PIPE, TO REMOVE
- EXISTING STORM PIPE, TO REMAIN
- EXISTING SANITARY SEWER, TO REMAIN
- EXISTING WATERMAIN, TO REMAIN
- EXISTING UNDERGROUND ELECTRIC, TO REMAIN
- EXISTING UNDERGROUND TELEPHONE, TO REMAIN
- EXISTING GAS UTILITY, TO REMAIN
- OVERHEAD UTILITY, TO REMAIN
- EASEMENT, OR PARCEL LINE
- EXISTING FENCING, TO REMAIN
- TREE PROTECTION FENCING
- SAW CUT, PAVEMENT TYPE AS NOTED
- CURB & GUTTER, TO REMAIN
- OVERHEAD UTILITY POLE, TO REMAIN
- STORMWATER STRUCTURE, TO REMAIN
- STORMWATER STRUCTURE, TO REMAIN
- CATCHBASIN, TO REMAIN
- SANITARY MANHOLE, TO REMAIN
- LIGHT POLE, TO REMAIN
- STORMWATER INLET PROTECTION
- EXISTING TREE TO REMAIN, D.B.H. AS NOTED (DECIDUOUS 12", CONIFEROUS 12")
- EXISTING TREE FOR REMOVAL, D.B.H. AS NOTED (DECIDUOUS 8", CONIFEROUS 8")

NOTES
1. SEE ALSO CITY OF SAINT PAUL AND CITY R.O.W. NOTES ON DRAWINGS G1.1, G1.2, G1.3
2. BENCHMARK 1 IS A TOP NUT OF HYDRANT LOCATED ON THE NORTHEAST CORNER OF THE INTERSECTION OF HAZELWOOD STREET AND JESSAMINE LANE. WITH AND ELEVATION OF 877.31 FT, VERTICAL DATUM NGV 29

ISSUE FOR BID AND PERMITTING

NO.	BY	CHK.	APP.	DATE	REVISION DESCRIPTION
-	-	-	-	———	-

I HEREBY CERTIFY THAT THIS PLAN, SPECIFICATION, OR REPORT WAS PREPARED BY ME OR UNDER MY DIRECT SUPERVISION AND THAT I AM A DULY LICENSED PROFESSIONAL ENGINEER UNDER THE LAWS OF THE STATE OF MINNESOTA.

PRINTED NAME MATTHEW R. METZGER

SIGNATURE [signature] DATE 02/03/2025 LICENSE # 47651

	A	B	C	0	1	2	3
CLIENT							
PERMIT				01/24			
BID				02/25			
CONSTRUCTION							
RECORD							

RELEASED TO/FOR — DATE RELEASED

BARR
Corporate Headquarters: Minneapolis, Minnesota
Ph: 1-800-632-2277

Project Office:
BARR ENGINEERING CO.
4300 MARKETPOINTE DRIVE
SUITE 200
MINNEAPOLIS, MN 55435
Ph: 1-800-632-2277
Fax: (952) 832-2601
www.barr.com

Scale	AS SHOWN
Date	02/03/2025
Drawn	MRM/AMP2
Checked	MRM/MDB3
Designed	MRM/MDB3
Approved	---

RAMSEY-WASHINGTON METRO WATERSHED DISTRICT

ROOSEVELT HOMES PHASE 3
SAINT PAUL, MINNESOTA

EXISTING CONDITIONS, REMOVALS, & EROSION CONTROL PLAN
NORTH FLUME & STORM PIPE

BARR PROJECT No. 23621477.03
CLIENT PROJECT No.
DWG. No. C-1.0
REV. No. 0

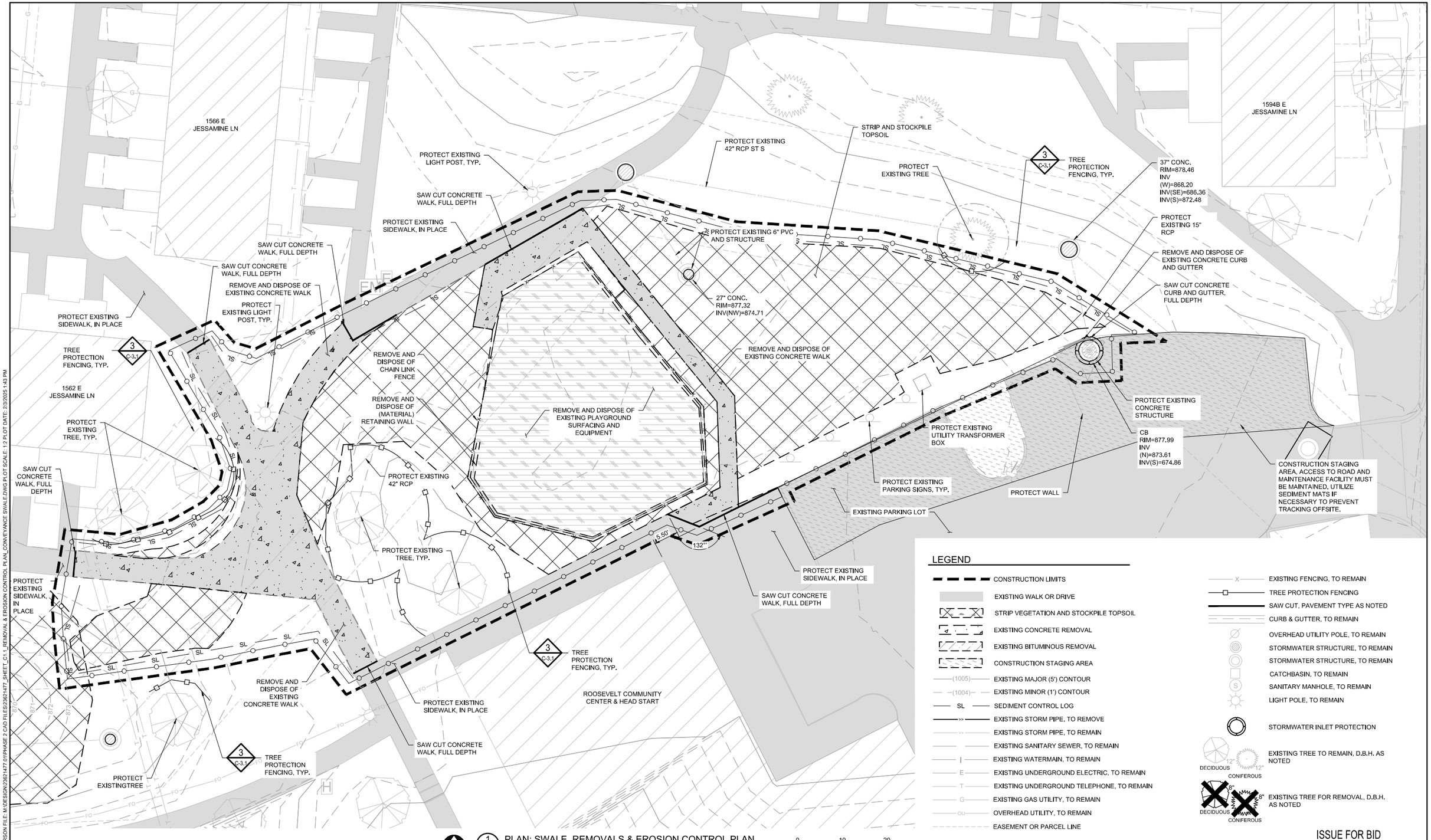

LEGEND

- CONSTRUCTION LIMITS
- EXISTING WALK OR DRIVE
- STRIP VEGETATION AND STOCKPILE TOPSOIL
- EXISTING CONCRETE REMOVAL
- EXISTING BITUMINOUS REMOVAL
- CONSTRUCTION STAGING AREA
- (1005) EXISTING MAJOR (5') CONTOUR
- (1004) EXISTING MINOR (1') CONTOUR
- SL SEDIMENT CONTROL LOG
- EXISTING STORM PIPE, TO REMOVE
- EXISTING STORM PIPE, TO REMAIN
- EXISTING SANITARY SEWER, TO REMAIN
- EXISTING WATERMAIN, TO REMAIN
- E EXISTING UNDERGROUND ELECTRIC, TO REMAIN
- T EXISTING UNDERGROUND TELEPHONE, TO REMAIN
- G EXISTING GAS UTILITY, TO REMAIN
- OU OVERHEAD UTILITY, TO REMAIN
- EASEMENT OR PARCEL LINE
- X EXISTING FENCING, TO REMAIN
- TREE PROTECTION FENCING
- SAW CUT, PAVEMENT TYPE AS NOTED
- CURB & GUTTER, TO REMAIN
- OVERHEAD UTILITY POLE, TO REMAIN
- STORMWATER STRUCTURE, TO REMAIN
- STORMWATER STRUCTURE, TO REMAIN
- CATCHBASIN, TO REMAIN
- S SANITARY MANHOLE, TO REMAIN
- LIGHT POLE, TO REMAIN
- STORMWATER INLET PROTECTION
- DECIDUOUS 12" / CONIFEROUS 12" EXISTING TREE TO REMAIN, D.B.H. AS NOTED
- DECIDUOUS 8" / CONIFEROUS 8" EXISTING TREE FOR REMOVAL, D.B.H. AS NOTED

1. SEE ALSO CITY OF SAINT PAUL AND CITY R.O.W. NOTES ON DRAWINGS G1.1, G1.2, G1.3

N

1 PLAN: SWALE REMOVALS & EROSION CONTROL PLAN
AS SHOWN

0 10 20
SCALE IN FEET

ISSUE FOR BID AND PERMITTING

NO.	BY	CHK.	APP.	DATE	REVISION DESCRIPTION

I HEREBY CERTIFY THAT THIS PLAN, SPECIFICATION, OR REPORT WAS PREPARED BY ME OR UNDER MY DIRECT SUPERVISION AND THAT I AM A DULY LICENSED PROFESSIONAL ENGINEER UNDER THE LAWS OF THE STATE OF MINNESOTA.
PRINTED NAME MATTHEW R. METZGER
SIGNATURE
DATE 02/03/2025 LICENSE # 47651

CLIENT								
PERMIT				01/24				
BID				02/25				
CONSTRUCTION								
RECORD								
RELEASED TO/FOR	A	B	C	0	1	2	3	
DATE RELEASED								

BARR
Corporate Headquarters: Minneapolis, Minnesota
Ph: 1-800-632-2277
Project Office:
BARR ENGINEERING CO.
4300 MARKETPOINTE DRIVE
SUITE 200
MINNEAPOLIS, MN 55435
Ph: 1-800-632-2277
Fax: (952) 832-2601
www.barr.com

Scale	AS SHOWN
Date	02/03/2025
Drawn	MRM/AMP3
Checked	MRM/MDB3
Designed	MRM/MDB3
Approved	---

RAMSEY-WASHINGTON METRO WATERSHED DISTRICT

ROOSEVELT HOMES PHASE 3
SAINT PAUL, MINNESOTA

EXISTING CONDITIONS, REMOVALS, & EROSION CONTROL PLAN
CONVEYANCE SWALE

BARR PROJECT No. 23621477.03
CLIENT PROJECT No.
DWG. No. C1.1
REV. No. 0

CADD USER: ANDREW M. PAPKE-LARSON FILE: M:\DESIGN\23621477.01\PHASE 2 CAD FILES\23621477_SHEET_C1.1_REMOVAL & EROSION CONTROL PLAN_CONVEYANCE SWALE.DWG PLOT SCALE: 1:2 PLOT DATE: 2/3/2025 1:43 PM

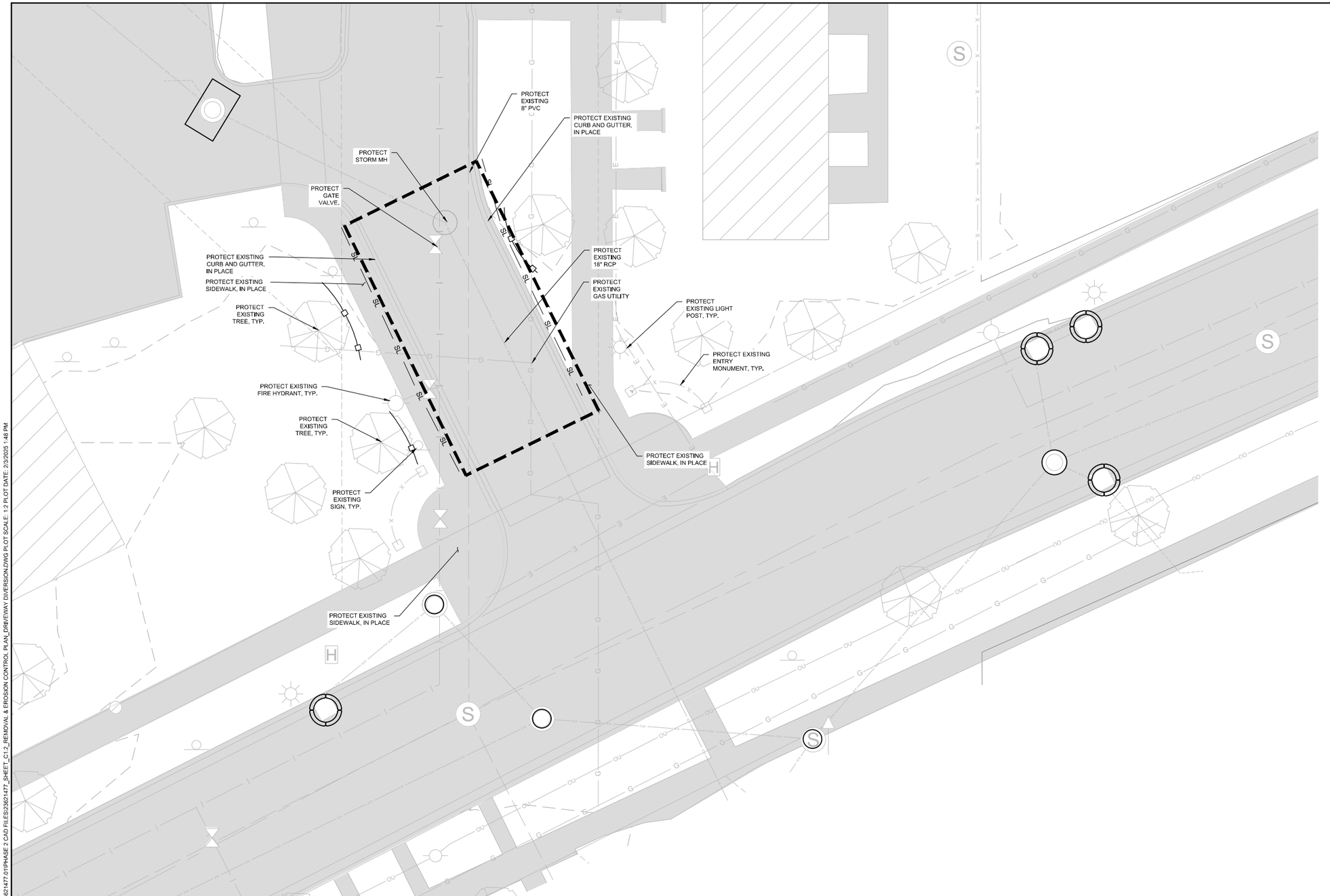

LEGEND

- CONSTRUCTION LIMITS
- EXISTING WALK OR DRIVE
- STRIP VEGETATION AND STOCKPILE TOPSOIL
- EXISTING CONCRETE REMOVAL
- EXISTING BITUMINOUS REMOVAL
- (1005) EXISTING MAJOR (5') CONTOUR
- (1004) EXISTING MINOR (1') CONTOUR
- SL SEDIMENT CONTROL LOG
- EXISTING STORM PIPE, TO REMOVE
- EXISTING STORM PIPE, TO REMAIN
- EXISTING SANITARY SEWER, TO REMAIN
- I EXISTING WATERMAIN, TO REMAIN
- E EXISTING UNDERGROUND ELECTRIC, TO REMAIN
- T EXISTING UNDERGROUND TELEPHONE, TO REMAIN
- G EXISTING GAS UTILITY, TO REMAIN
- OU OVERHEAD UTILITY, TO REMAIN
- EASEMENT OR PARCEL LINE
- X EXISTING FENCING, TO REMAIN
- TREE PROTECTION FENCING
- SAW CUT, PAVEMENT TYPE AS NOTED
- CURB & GUTTER, TO REMAIN
- OVERHEAD UTILITY POLE, TO REMAIN
- STORMWATER STRUCTURE, TO REMAIN
- STORMWATER STRUCTURE, TO REMAIN
- CATCHBASIN, TO REMAIN
- S SANITARY MANHOLE, TO REMAIN
- LIGHT POLE, TO REMAIN
- STORMWATER INLET PROTECTION
- DECIDUOUS 12" / CONIFEROUS 12" EXISTING TREE TO REMAIN, D.B.H. AS NOTED
- DECIDUOUS 8" / CONIFEROUS 8" EXISTING TREE FOR REMOVAL, D.B.H. AS NOTED

1. SEE ALSO CITY OF SAINT PAUL AND CITY R.O.W. NOTES ON DRAWINGS G1.1, G1.2, G1.3

N

1 / - PLAN: EAST BASIN REMOVALS & EROSION CONTROL PLAN
AS SHOWN

0 10 20
SCALE IN FEET

ISSUE FOR BID
AND PERMITTING

NO.	BY	CHK.	APP.	DATE	REVISION DESCRIPTION
-	-	-	-	———	-

I HEREBY CERTIFY THAT THIS PLAN, SPECIFICATION, OR REPORT WAS PREPARED BY ME OR UNDER MY DIRECT SUPERVISION AND THAT I AM A DULY LICENSED PROFESSIONAL ENGINEER UNDER THE LAWS OF THE STATE OF MINNESOTA.

PRINTED NAME MATTHEW R. METZGER

SIGNATURE Matthew R Metzger

DATE 02/03/2025 LICENSE # 47651

	A	B	C	0	1	2	3
CLIENT							
PERMIT				01/24			
BID				02/25			
CONSTRUCTION							
RECORD							

RELEASED TO/FOR — DATE RELEASED

BARR
Corporate Headquarters:
Minneapolis, Minnesota
Ph: 1-800-632-2277

Project Office:
BARR ENGINEERING CO.
4300 MARKETPOINTE DRIVE
SUITE 200
MINNEAPOLIS, MN 55435
Ph: 1-800-632-2277
Fax: (952) 832-2601
www.barr.com

Scale	AS SHOWN
Date	02/03/2025
Drawn	MRM/AMP3
Checked	MRM/MDB3
Designed	MRM/MDB3
Approved	--

RAMSEY-WASHINGTON METRO WATERSHED DISTRICT

ROOSEVELT HOMES PHASE 3
SAINT PAUL, MINNESOTA

EXISTING CONDITIONS, REMOVALS, & EROSION CONTROL PLAN
DRIVEWAY DIVERSION

BARR PROJECT No.	
23621477.01	
CLIENT PROJECT No.	
DWG. No.	REV. No.
C1.2	0

CADD USER: ANDREW M. PAPKE-LARSON FILE: M:\DESIGN\23621477.01\PHASE 2 CAD FILES\23621477_SHEET_C1.2_REMOVAL & EROSION CONTROL PLAN_DRIVEWAY DIVERSION.DWG PLOT SCALE: 1:2 PLOT DATE: 2/3/2025 1:48 PM

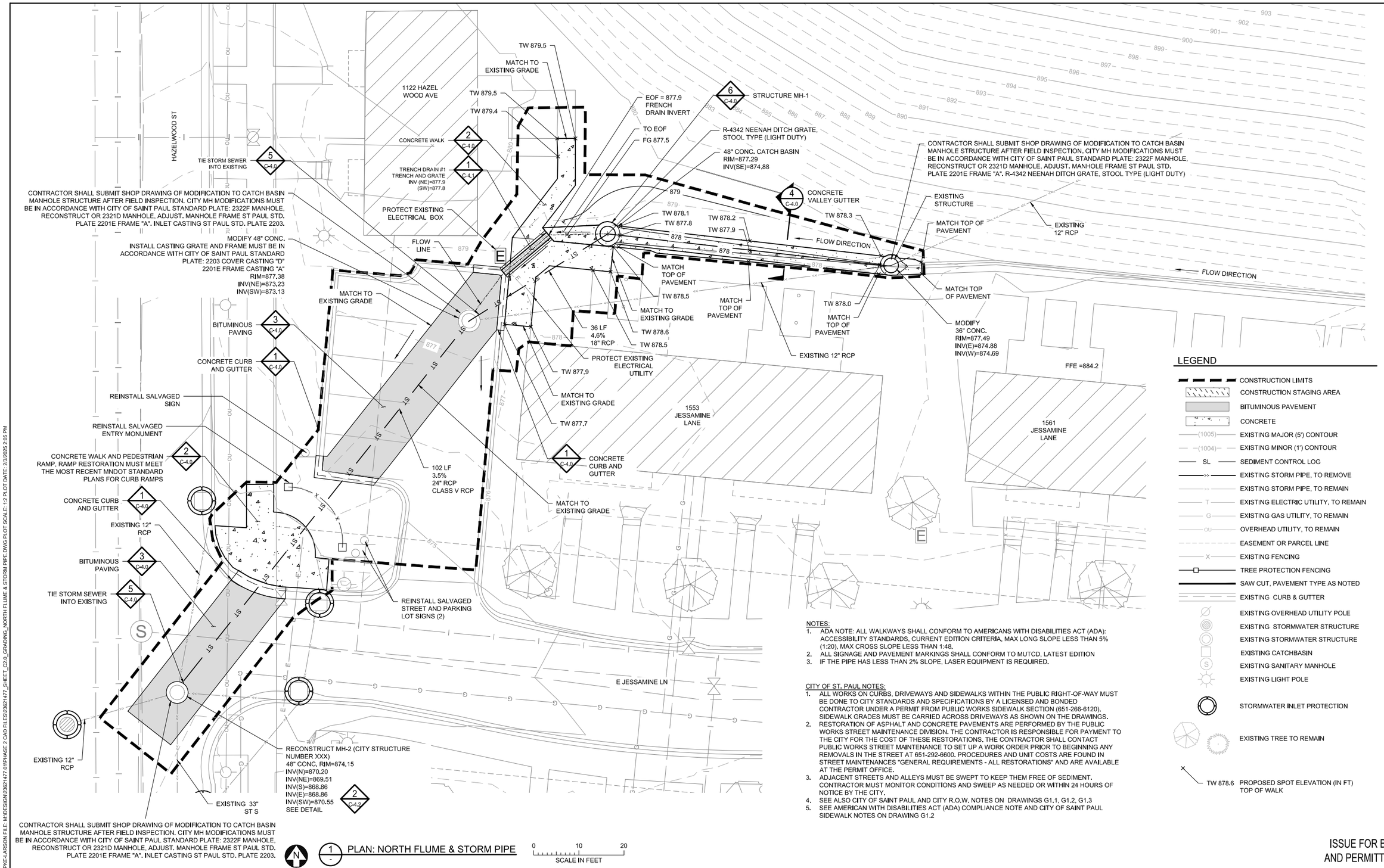

LEGEND

- CONSTRUCTION LIMITS
- CONSTRUCTION STAGING AREA
- BITUMINOUS PAVEMENT
- CONCRETE
- (1005) EXISTING MAJOR (5') CONTOUR
- (1004) EXISTING MINOR (1') CONTOUR
- SL SEDIMENT CONTROL LOG
- EXISTING STORM PIPE, TO REMOVE
- EXISTING STORM PIPE, TO REMAIN
- T EXISTING ELECTRIC UTILITY, TO REMAIN
- G EXISTING GAS UTILITY, TO REMAIN
- OU OVERHEAD UTILITY, TO REMAIN
- EASEMENT OR PARCEL LINE
- X EXISTING FENCING
- TREE PROTECTION FENCING
- SAW CUT, PAVEMENT TYPE AS NOTED
- EXISTING CURB & GUTTER
- EXISTING OVERHEAD UTILITY POLE
- EXISTING STORMWATER STRUCTURE
- EXISTING STORMWATER STRUCTURE
- EXISTING CATCHBASIN
- S EXISTING SANITARY MANHOLE
- EXISTING LIGHT POLE
- STORMWATER INLET PROTECTION
- EXISTING TREE TO REMAIN
- TW 878.6 PROPOSED SPOT ELEVATION (IN FT) TOP OF WALK

NOTES:
1. ADA NOTE: ALL WALKWAYS SHALL CONFORM TO AMERICANS WITH DISABILITIES ACT (ADA): ACCESSIBILITY STANDARDS, CURRENT EDITION CRITERIA, MAX LONG SLOPE LESS THAN 5% (1:20), MAX CROSS SLOPE LESS THAN 1:48.
2. ALL SIGNAGE AND PAVEMENT MARKINGS SHALL CONFORM TO MUTCD, LATEST EDITION
3. IF THE PIPE HAS LESS THAN 2% SLOPE, LASER EQUIPMENT IS REQUIRED.

CITY OF ST. PAUL NOTES:
1. ALL WORKS ON CURBS, DRIVEWAYS AND SIDEWALKS WITHIN THE PUBLIC RIGHT-OF-WAY MUST BE DONE TO CITY STANDARDS AND SPECIFICATIONS BY A LICENSED AND BONDED CONTRACTOR UNDER A PERMIT FROM PUBLIC WORKS SIDEWALK SECTION (651-266-6120). SIDEWALK GRADES MUST BE CARRIED ACROSS DRIVEWAYS AS SHOWN ON THE DRAWINGS.
2. RESTORATION OF ASPHALT AND CONCRETE PAVEMENTS ARE PERFORMED BY THE PUBLIC WORKS STREET MAINTENANCE DIVISION. THE CONTRACTOR IS RESPONSIBLE FOR PAYMENT TO THE CITY FOR THE COST OF THESE RESTORATIONS. THE CONTRACTOR SHALL CONTACT PUBLIC WORKS STREET MAINTENANCE TO SET UP A WORK ORDER PRIOR TO BEGINNING ANY REMOVALS IN THE STREET AT 651-292-6600. PROCEDURES AND UNIT COSTS ARE FOUND IN STREET MAINTENANCES "GENERAL REQUIREMENTS - ALL RESTORATIONS" AND ARE AVAILABLE AT THE PERMIT OFFICE.
3. ADJACENT STREETS AND ALLEYS MUST BE SWEPT TO KEEP THEM FREE OF SEDIMENT. CONTRACTOR MUST MONITOR CONDITIONS AND SWEEP AS NEEDED OR WITHIN 24 HOURS OF NOTICE BY THE CITY.
4. SEE ALSO CITY OF SAINT PAUL AND CITY R.O.W. NOTES ON DRAWINGS G1.1, G1.2, G1.3
5. SEE AMERICAN WITH DISABILITIES ACT (ADA) COMPLIANCE NOTE AND CITY OF SAINT PAUL SIDEWALK NOTES ON DRAWING G1.2

N

1 - PLAN: NORTH FLUME & STORM PIPE

0 10 20
SCALE IN FEET

ISSUE FOR BID AND PERMITTING

NO.	BY	CHK.	APP.	DATE	REVISION DESCRIPTION

I HEREBY CERTIFY THAT THIS PLAN, SPECIFICATION, OR REPORT WAS PREPARED BY ME OR UNDER MY DIRECT SUPERVISION AND THAT I AM A DULY LICENSED PROFESSIONAL ENGINEER UNDER THE LAWS OF THE STATE OF MINNESOTA.
PRINTED NAME MATTHEW R. METZGER
SIGNATURE
DATE 02/03/2025 LICENSE # 47651

	A	B	C	0	1	2	3
CLIENT							
PERMIT				01/24			
BID				02/25			
CONSTRUCTION							
RECORD							
RELEASED TO/FOR	DATE RELEASED						

BARR
Project Office:
BARR ENGINEERING CO.
4300 MARKETPOINTE DRIVE
SUITE 200
MINNEAPOLIS, MN 55435
Ph: 1-800-632-2277
Fax: (952) 832-2601
www.barr.com
Corporate Headquarters: Minneapolis, Minnesota
Ph: 1-800-632-2277

Scale	AS SHOWN
Date	02/03/2025
Drawn	MRM/AMP3
Checked	MRM/MDB3
Designed	MRM/MDB3
Approved	---

RAMSEY-WASHINGTON METRO WATERSHED DISTRICT

ROOSEVELT HOMES PHASE 3
SAINT PAUL, MINNESOTA

SITE PLAN & GRADING PLAN
NORTH FLUME & STORM PIPE

BARR PROJECT No.	
23621477.03	
CLIENT PROJECT No.	
DWG. No.	REV. No.
C-2.0	0

CADD USER: ANDREW M. PAPKE-LARSON FILE: M:\DESIGN\23621477.01\PHASE 2 CAD FILES\23621477_SHEET_C2.0_GRADING_NORTH FLUME & STORM PIPE.DWG PLOT SCALE: 1:2 PLOT DATE: 2/3/2025 2:05 PM

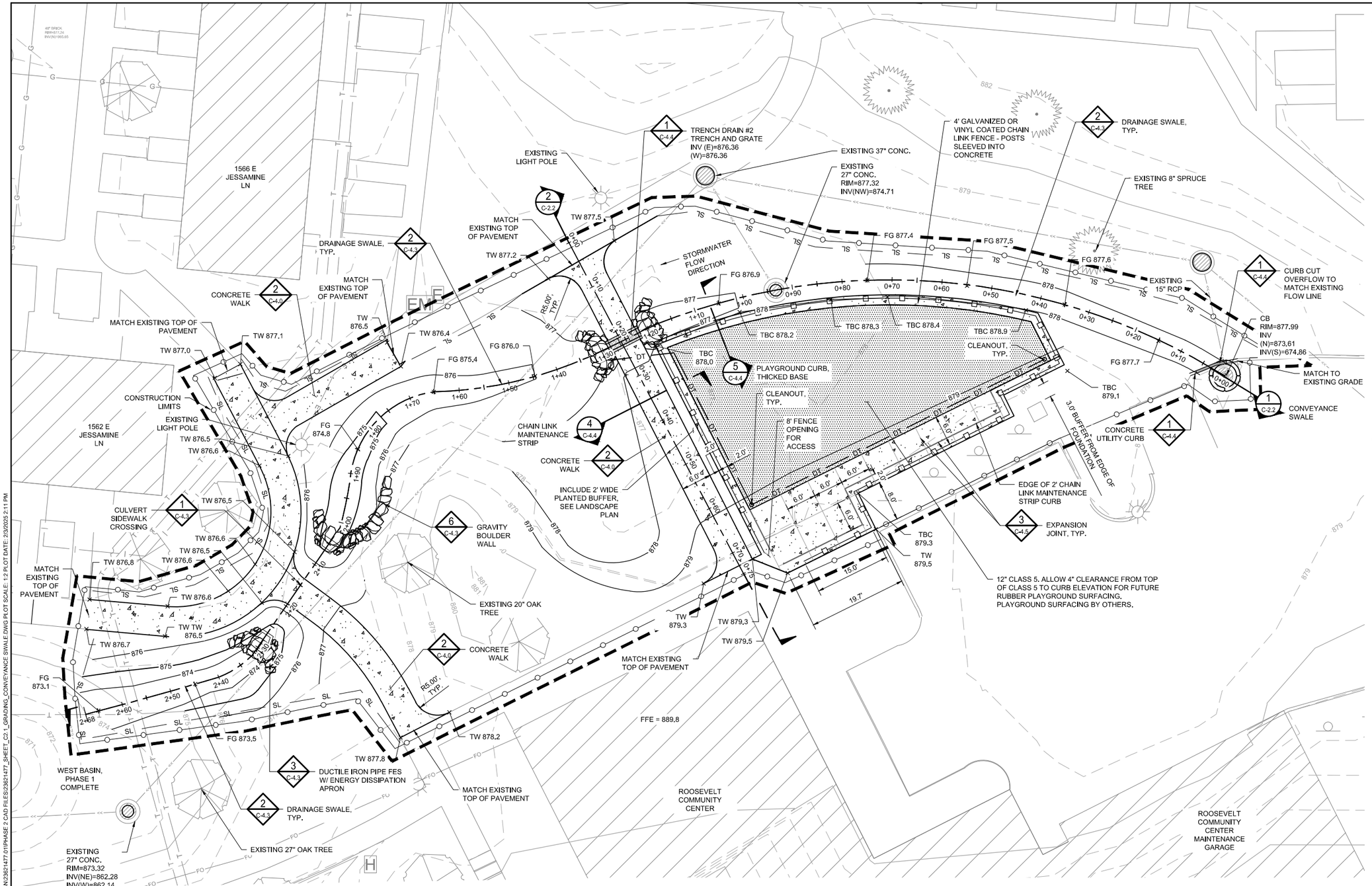

LEGEND

- CONSTRUCTION LIMITS
- CONCRETE
- BITUMINOUS PAVEMENT
- PLAYGROUND SURFACING
- CHAIN LINK FENCE
- (1005) EXISTING MAJOR (5') CONTOUR
- (1004) EXISTING MINOR (1') CONTOUR
- SL SEDIMENT CONTROL LOG
- EXISTING STORM PIPE, TO REMOVE
- EXISTING STORM PIPE, TO REMAIN
- T EXISTING ELECTRIC UTILITY, TO REMAIN
- G EXISTING GAS UTILITY, TO REMAIN
- OU OVERHEAD UTILITY, TO REMAIN
- EASEMENT
- X EXISTING FENCING
- SAW CUT, PAVEMENT TYPE AS NOTED
- EXISTING CURB & GUTTER
- EXISTING OVERHEAD UTILITY POLE
- EXISTING STORMWATER STRUCTURE
- EXISTING STORMWATER STRUCTURE
- EXISTING CATCHBASIN
- S EXISTING SANITARY MANHOLE
- EXISTING LIGHT POLE
- STORMWATER INLET PROTECTION
- EXISTING TREE TO REMAIN
- TW 879.5 PROPOSED SPOT ELEVATION (IN FT) TOP OF WALK
- TBC 879,5 PROPOSED SPOT ELEVATION (IN FT) TOP BACK OF CURB

NOTES:
1. ADA NOTE: ALL WALKWAYS SHALL CONFORM TO AMERICANS WITH DISABILITIES ACT (ADA): ACCESSIBILITY STANDARDS, CURRENT EDITION CRITERIA, MAX LONG SLOPE LESS THAN 5% (1:20), MAX CROSS SLOPE LESS THAN 1:48.
2. ALL SIGNAGE AND PAVEMENT MARKINGS SHALL CONFORM TO MUTCD, LATEST EDITION
3. IF THE PROPOSED PIPE HAS LESS THAN 2% SLOPE, LASER EQUIPMENT IS REQUIRED.

CITY OF ST. PAUL NOTES:
1. ALL WORKS ON CURBS, DRIVEWAYS AND SIDEWALKS WITHIN THE PUBLIC RIGHT-OF-WAY MUST BE DONE TO CITY STANDARDS AND SPECIFICATIONS BY A LICENSED AND BONDED CONTRACTOR UNDER A PERMIT FROM PUBLIC WORKS SIDEWALK SECTION (651-266-6120). SIDEWALK GRADES MUST BE CARRIED ACROSS DRIVEWAYS AS SHOWN ON THE DRAWINGS.
2. RESTORATION OF ASPHALT AND CONCRETE PAVEMENTS ARE PERFORMED BY THE PUBLIC WORKS STREET MAINTENANCE DIVISION, THE CONTRACTOR IS RESPONSIBLE FOR PAYMENT TO THE CITY FOR THE COST OF THESE RESTORATIONS. THE CONTRACTOR SHALL CONTACT PUBLIC WORKS STREET MAINTENANCE TO SET UP A WORK ORDER PRIOR TO BEGINNING ANY REMOVALS IN THE STREET AT 651-292-6600. PROCEDURES AND UNIT COSTS ARE FOUND IN STREET MAINTENANCES "GENERAL REQUIREMENTS - ALL RESTORATIONS" AND ARE AVAILABLE AT THE PERMIT OFFICE.
3. ADJACENT STREETS AND ALLEYS MUST BE SWEPT TO KEEP THEM FREE OF SEDIMENT. CONTRACTOR MUST MONITOR CONDITIONS AND SWEEP AS NEEDED OR WITHIN 24 HOURS OF NOTICE BY THE CITY.
4. SEE ALSO CITY OF SAINT PAUL AND CITY R.O.W. NOTES ON DRAWINGS G1.1, G1.2, G1.3
5. SEE AMERICAN WITH DISABILITIES ACT (ADA) COMPLIANCE NOTE AND CITY OF SAINT PAUL SIDEWALK NOTES ON DRAWING G1.2

1 C-2.1 PLAN: CONVEYANCE SWALE

0 10 20
SCALE IN FEET

ISSUE FOR BID AND PERMITTING

CADD USER: ANDREW M. PAPKE-LARSON FILE: M:\DESIGN\23621477.01\PHASE 2 CAD FILES\23621477_SHEET_C2-1_GRADING_CONVEYANCE SWALE.DWG PLOT SCALE: 1:2 PLOT DATE: 2/3/2025 2:11 PM

NO.	BY	CHK.	APP.	DATE	REVISION DESCRIPTION
-	-	-	-	———	-

I HEREBY CERTIFY THAT THIS PLAN, SPECIFICATION, OR REPORT WAS PREPARED BY ME OR UNDER MY DIRECT SUPERVISION AND THAT I AM A DULY LICENSED PROFESSIONAL ENGINEER UNDER THE LAWS OF THE STATE OF MINNESOTA.

PRINTED NAME MATTHEW R. METZGER

SIGNATURE

DATE 02/03/2025 LICENSE # 47651

CLIENT								
PERMIT				01/24				
BID				02/25				
CONSTRUCTION								
RECORD								
RELEASED TO/FOR	A	B	C	0	1	2	3	
	DATE RELEASED							

BARR
Corporate Headquarters: Minneapolis, Minnesota
Ph: 1-800-632-2277

Project Office:
BARR ENGINEERING CO.
4300 MARKETPOINTE DRIVE
SUITE 200
MINNEAPOLIS, MN 55435
Ph: 1-800-632-2277
Fax: (952) 832-2601
www.barr.com

Scale	AS SHOWN
Date	02/03/2025
Drawn	MRM/AMP2
Checked	MRM/MDB3
Designed	MRM/MDB3
Approved	---

RAMSEY-WASHINGTON METRO WATERSHED DISTRICT

ROOSEVELT HOMES PHASE 3
SAINT PAUL, MINNESOTA

SITE PLAN & GRADING PLAN
CONVEYANCE SWALE

BARR PROJECT No.	
23621477.03	
CLIENT PROJECT No.	
DWG. No.	REV. No.
C-2.1	0

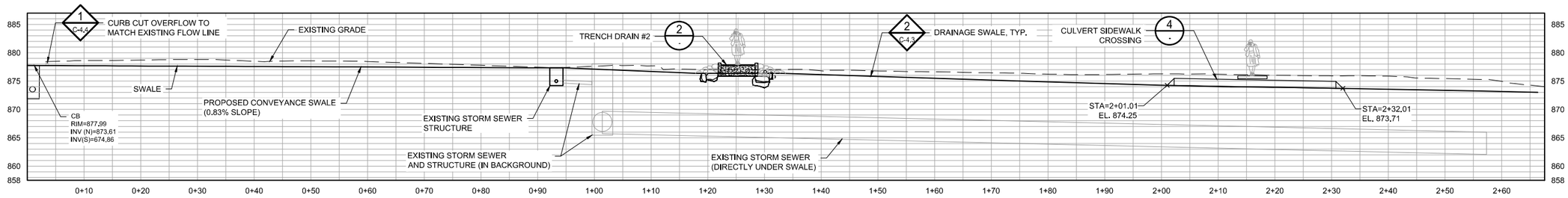

1 - SECTION: CONVEYANCE SWALE

0 10 20
SCALE IN FEET

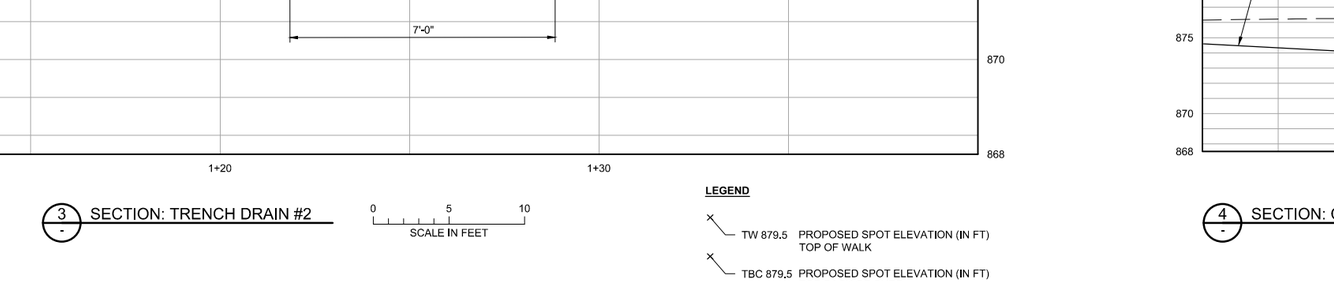

2 - SECTION: TRENCH DRAIN AT SIDEWALK

0 5 10
SCALE IN FEET

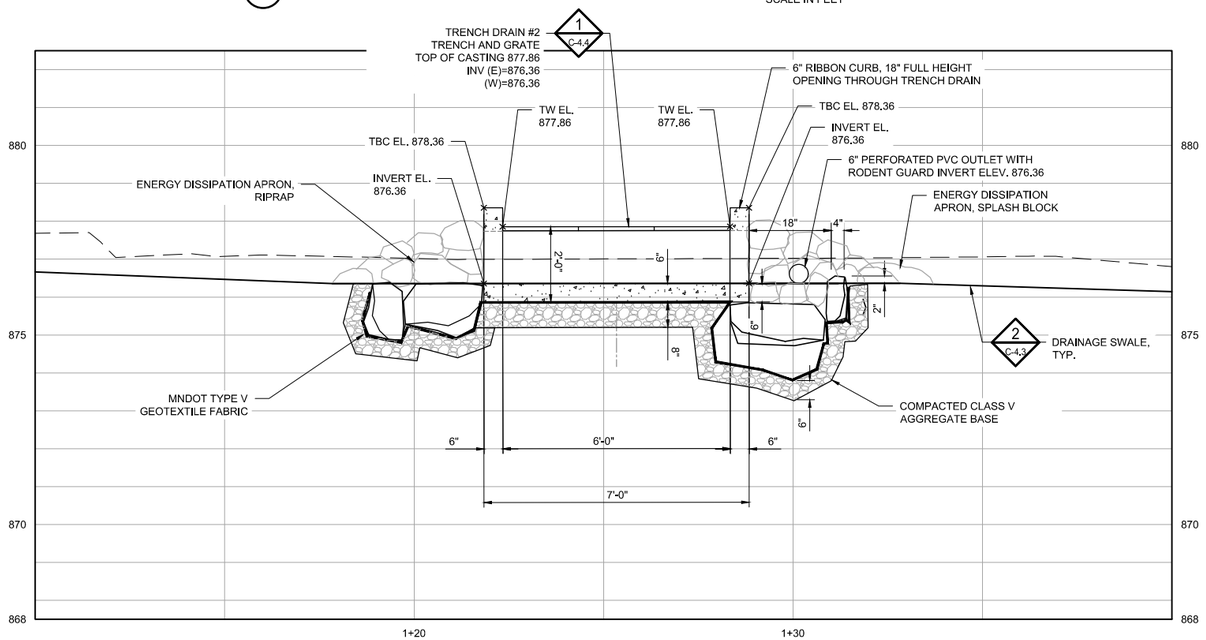

3 - SECTION: TRENCH DRAIN #2

0 5 10
SCALE IN FEET

LEGEND

TW 879.5 PROPOSED SPOT ELEVATION (IN FT) TOP OF WALK

TBC 879.5 PROPOSED SPOT ELEVATION (IN FT) TOP BACK OF CURB

NOTE:
1. IF THE PROPOSED PIPE HAS LESS THAN 2% SLOPE, LASER EQUIPMENT IS REQUIRED.
2. SEE AMERICAN WITH DISABILITIES ACT (ADA) COMPLIANCE NOTE AND CITY OF SAINT PAUL SIDEWALK NOTES ON DRAWING G1.2

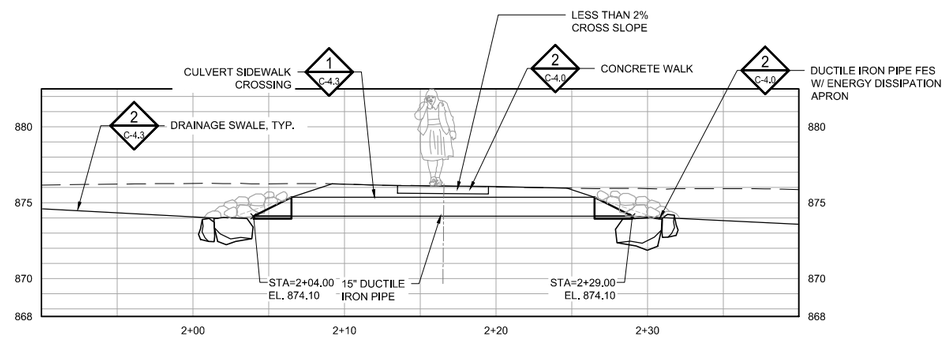

4 - SECTION: CULVERT SIDEWALK CROSSING

0 5 10
SCALE IN FEET

ISSUE FOR BID AND PERMITTING

NO.	BY	CHK.	APP.	DATE	REVISION DESCRIPTION

I HEREBY CERTIFY THAT THIS PLAN, SPECIFICATION, OR REPORT WAS PREPARED BY ME OR UNDER MY DIRECT SUPERVISION AND THAT I AM A DULY LICENSED PROFESSIONAL ENGINEER UNDER THE LAWS OF THE STATE OF MINNESOTA.

PRINTED NAME MATTHEW R. METZGER

SIGNATURE

DATE 02/03/2025 LICENSE # 47651

CLIENT								
PERMIT				01/24				
BID				02/25				
CONSTRUCTION								
RECORD								
RELEASED TO/FOR	A	B	C	0	1	2	3	
	DATE RELEASED							

BARR
Corporate Headquarters: Minneapolis, Minnesota
Ph: 1-800-632-2277

Project Office:
BARR ENGINEERING CO.
4300 MARKETPOINTE DRIVE
SUITE 200
MINNEAPOLIS, MN 55435
Ph: 1-800-632-2277
Fax: (952) 832-2601
www.barr.com

Scale	AS SHOWN
Date	02/03/2025
Drawn	MRM/AMP2
Checked	MRM/MDB3
Designed	MRM/MDB3
Approved	--

RAMSEY-WASHINGTON METRO WATERSHED DISTRICT

ROOSEVELT HOMES PHASE 3
SAINT PAUL, MINNESOTA

STIE PLAN, GRADING PLAN, & PROFILES
CONVEYANCE SWALE PROFILES

BARR PROJECT No.	
23621477.03	
CLIENT PROJECT No.	
DWG. No.	REV. No.
C-2.2	0

CADD USER: ANDREW M. PAPKE-LARSON FILE: M:\DESIGN\23621477.01\PHASE 2 CAD FILES\23621477_SHEET_C2.1_GRADING_CONVEYANCE SWALE.DWG PLOT SCALE: 1:2 PLOT DATE: 2/3/2025 2:10 PM

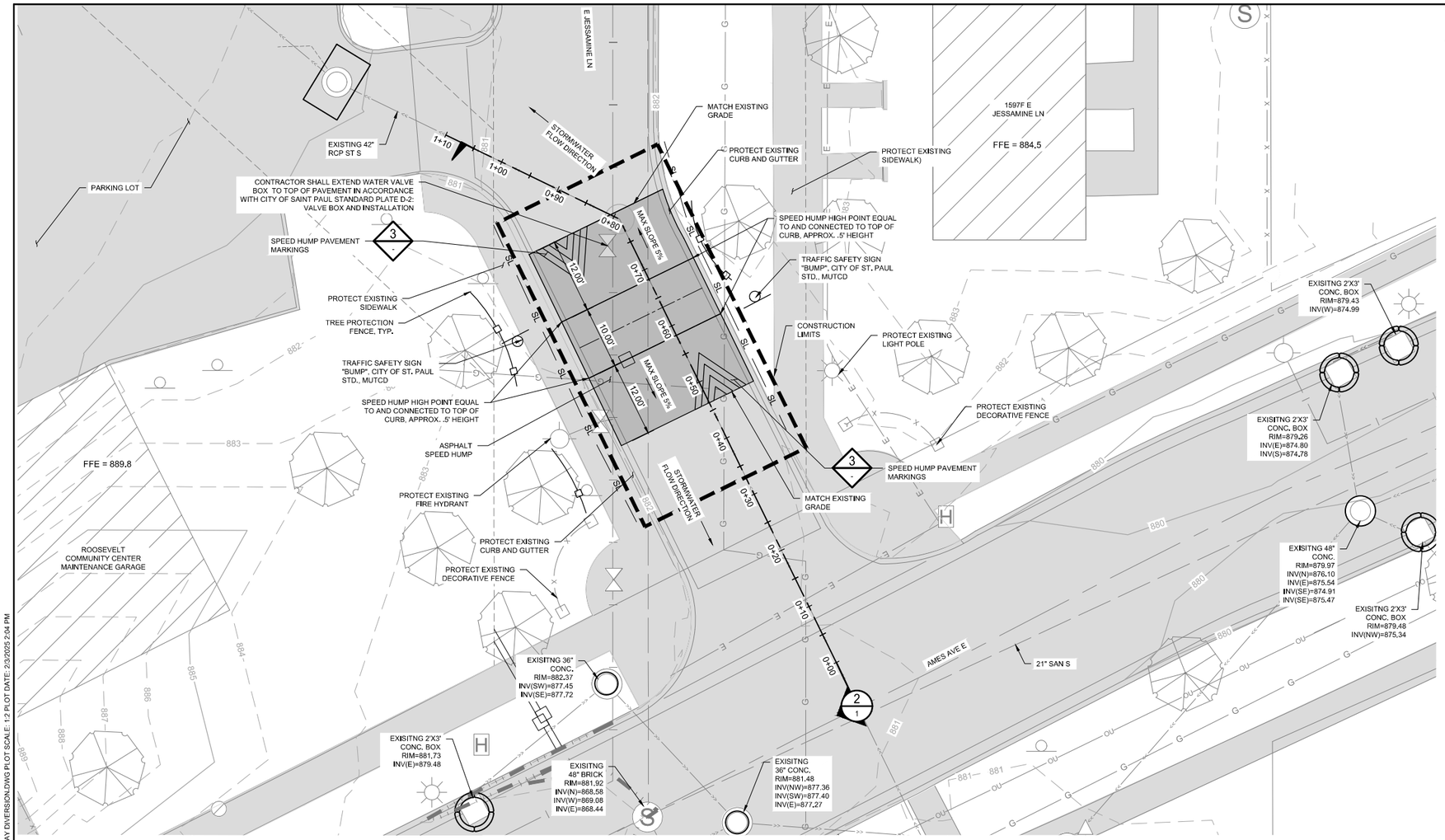

1 - PLAN: WEST BASIN

0 10 20
SCALE IN FEET

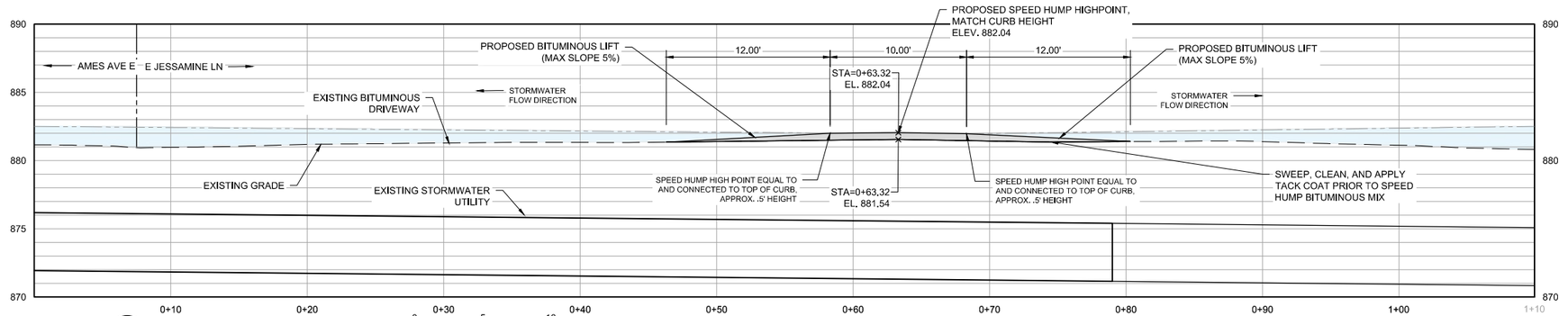

2 - SECTION: DRIVEWAY DIVERSION

0 5 10
SCALE IN FEET

LEGEND

- CONSTRUCTION LIMITS
- BITUMINOUS PAVEMENT
- (1005) EXISTING MAJOR (5') CONTOUR
- (1004) EXISTING MINOR (1') CONTOUR
- SL SEDIMENT CONTROL LOG
- EXISTING STORM PIPE, TO REMOVE
- EXISTING STORM PIPE, TO REMAIN
- T EXISTING ELECTRIC UTILITY, TO REMAIN
- G EXISTING GAS UTILITY, TO REMAIN
- OU OVERHEAD UTILITY, TO REMAIN
- EASEMENT
- X EXISTING FENCING
- TREE PROTECTION FENCING
- SAW CUT, PAVEMENT TYPE AS NOTED
- EXISTING CURB & GUTTER
- EXISTING OVERHEAD UTILITY POLE
- EXISTING STORMWATER STRUCTURE
- EXISTING STORMWATER STRUCTURE
- EXISTING CATCHBASIN
- S EXISTING SANITARY MANHOLE
- EXISTING LIGHT POLE
- STORMWATER INLET PROTECTION
- EXISTING TREE TO REMAIN

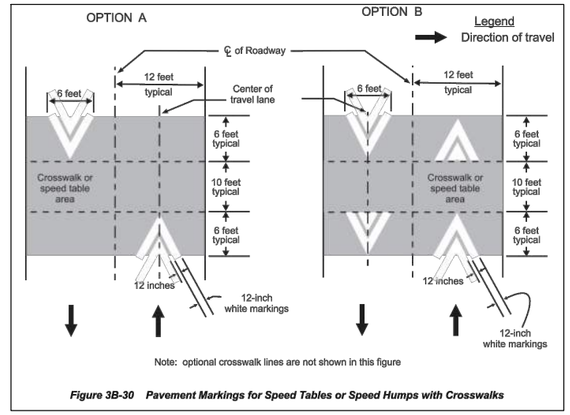

Note: optional crosswalk lines are not shown in this figure

Figure 3B-30 Pavement Markings for Speed Tables or Speed Humps with Crosswalks

SOURCE: MINNESOTA MANUAL ON UNIFORM TRAFFIC CONTROL DEVICES, 2024

3 - DETAIL: SPEED HUMP PAVEMENT MARKINGS
NOT TO SCALE

NOTE:
1. IF THE PROPOSED PIPE HAS LESS THAN 2% SLOPE, LASER EQUIPMENT IS REQUIRED.

CITY OF ST. PAUL NOTES:
1. ADJACENT STREETS AND ALLEYS MUST BE SWEPT TO KEEP THEM FREE OF SEDIMENT. CONTRACTOR MUST MONITOR CONDITIONS AND SWEEP AS NEEDED OR WITHIN 24 HOURS OF NOTICE BY THE CITY.
2. SEE ALSO CITY OF SAINT PAUL AND CITY R.O.W. NOTES ON DRAWINGS G1.1, G1.2, G1.3

ISSUE FOR BID AND PERMITTING

NO.	BY	CHK.	APP.	DATE	REVISION DESCRIPTION

I HEREBY CERTIFY THAT THIS PLAN, SPECIFICATION, OR REPORT WAS PREPARED BY ME OR UNDER MY DIRECT SUPERVISION AND THAT I AM A DULY LICENSED PROFESSIONAL ENGINEER UNDER THE LAWS OF THE STATE OF MINNESOTA.

PRINTED NAME MATTHEW R. METZGER
SIGNATURE
DATE 01/24/2025 LICENSE # 47651

	A	B	C	0	1	2	3
CLIENT							
PERMIT				01/24			
BID				02/25			
CONSTRUCTION							
RECORD							
RELEASED TO/FOR	DATE RELEASED						

BARR
Corporate Headquarters: Minneapolis, Minnesota
Ph: 1-800-632-2277

Project Office:
BARR ENGINEERING CO.
4300 MARKETPOINTE DRIVE
SUITE 200
MINNEAPOLIS, MN 55435
Ph: 1-800-632-2277
Fax: (952) 832-2601
www.barr.com

Scale	02/03/2025
Date	02/03/2025
Drawn	MRM/AMP2
Checked	MRM/MDB3
Designed	MRM/MDB3
Approved	--

RAMSEY-WASHINGTON METRO WATERSHED DISTRICT

ROOSEVELT HOMES PHASE 3
SAINT PAUL, MINNESOTA

SITE PLAN & GRADING PLAN
DRIVEWAY DIVERSION

BARR PROJECT No.	
23621477.03	
CLIENT PROJECT No.	
DWG. No.	REV. No.
C-2.3	0

CADD USER: ANDREW M. PAPKE-LARSON FILE: M:\DESIGN\23621477.01\PHASE 2 CAD FILES\23621477_SHEET_C2-3_GRADING_DRIVEWAY DIVERSION.DWG PLOT SCALE: 1:2 PLOT DATE: 2/3/2025 2:04 PM

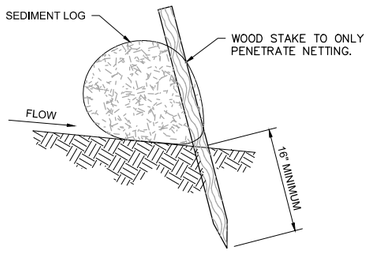

SIDE VIEW ON SLOPE

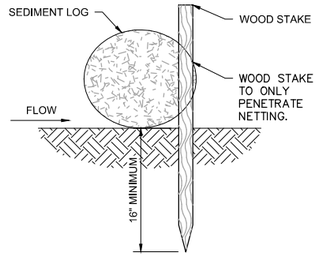

SIDE VIEW FLAT

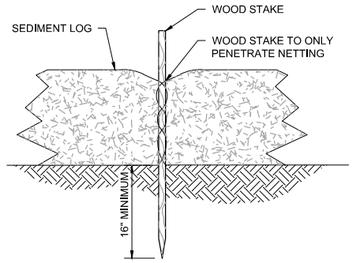

FRONT VIEW

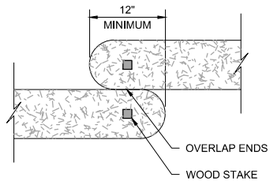

TOP VIEW

NOTES:
1. INSTALL SEDIMENT LOG ALONG CONTOURS (CONSTANT ELEVATION).
2. NO GAPS SHALL BE PRESENT UNDER SEDIMENT LOG. PREPARE AREA AS NEEDED TO SMOOTH SURFACE OR REMOVE DEBRIS.
3. REMOVE ACCUMULATED SEDIMENT WHEN REACHING 1/3 OF LOG HEIGHT.
4. MAINTAIN SEDIMENT LOG THROUGHOUT THE CONSTRUCTION PERIOD AND REPAIR OR REPLACED AS REQUIRED.
5. SHALL BE IN ACCORDANCE WITH MNDOT STANDARD PLATE #. INSTALL IN ACCORDANCE WITH MANUFACTURER'S RECOMMENDATIONS.

1 - DETAIL: SEDIMENT LOG - STAKING
NOT TO SCALE

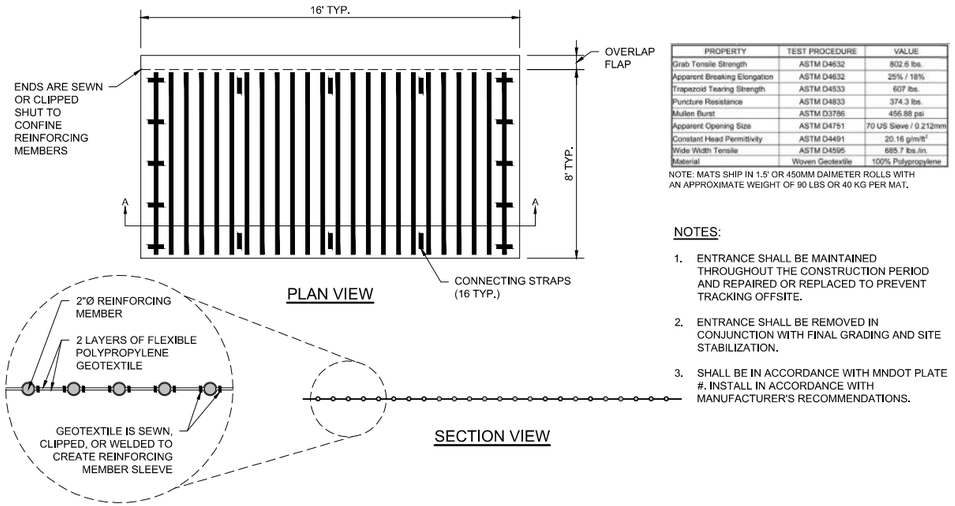

PLAN VIEW

SECTION VIEW

PROPERTY	TEST PROCEDURE	VALUE
Grab Tensile Strength	ASTM D4632	802.6 lbs.
Apparent Breaking Elongation	ASTM D4632	25% / 18%
Trapezoid Tearing Strength	ASTM D4533	607 lbs.
Puncture Resistance	ASTM D4833	374.3 lbs.
Mullen Burst	ASTM D3786	456.88 psi
Apparent Opening Size	ASTM D4751	70 US Sieve / 0.212mm
Constant Head Permittivity	ASTM D4491	20.16 $g/m/ft^2$
Wide Width Tensile	ASTM D4595	685.7 lbs./in.
Material	Woven Geotextile	100% Polypropylene

NOTE: MATS SHIP IN 1.5' OR 450MM DAMETER ROLLS WITH AN APPROXIMATE WEIGHT OF 90 LBS OR 40 KG PER MAT.

NOTES:
1. ENTRANCE SHALL BE MAINTAINED THROUGHOUT THE CONSTRUCTION PERIOD AND REPAIRED OR REPLACED TO PREVENT TRACKING OFFSITE.
2. ENTRANCE SHALL BE REMOVED IN CONJUNCTION WITH FINAL GRADING AND SITE STABILIZATION.
3. SHALL BE IN ACCORDANCE WITH MNDOT PLATE #. INSTALL IN ACCORDANCE WITH MANUFACTURER'S RECOMMENDATIONS.

3 - DETAIL: CONSTRUCTION ENTRANCE - RUMBLE STRIP MAT
NOT TO SCALE

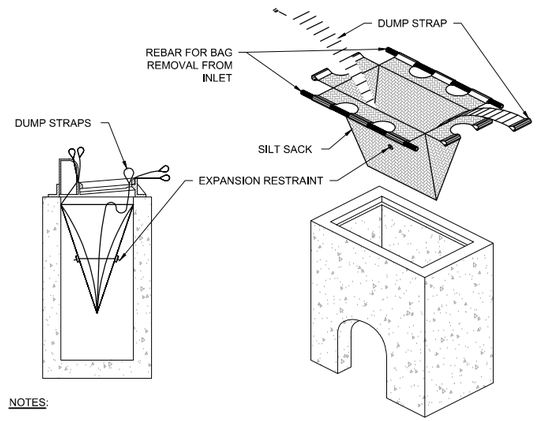

NOTES:
1. INSTALL INLET PROTECTION PRIOR TO ANY GRADING WORK IN THE AREA TO BE PROTECTED OR IMMEDIATELY FOLLOWING ANY CATCHBASIN INSTALLATION AND MAINTAIN THROUGHOUT THE CONSTRUCTION PERIOD.
2. MATERIALS SHALL BE SUFFICIENT TO ALLOW FLOW WHILE BLOCKING SEDIMENT. NO HOLES OR GAPS SHALL BE PRESENT IN/AROUND FILTER SACK.
3. CLEAN FILTER SACK AND REMOVE ACCUMULATED SEDIMENT AS REQUIRED TO ALLOW FLOW INTO THE CATCHBASIN AND PREVENT SEDIMENT FROM LEAVING THE DEVICE.
4. REMOVE DEVICE AND ANY ACCUMULATED SEDIMENT IN CONJUNCTION WITH THE FINAL GRADING AND SITE STABILIZATION.
5. SHALL BE IN ACCORDANCE WITH MNDOT STANDARD PLATE #. INSTALL IN ACCORDANCE WITH MANUFACTURER'S RECOMMENDATIONS. CURBLINE INLET PROTECTION MUST BE IN ACCORDANCE WITH CITY OF SAINT PAUL STD. PLATES 2401, 2402

5 - DETAIL: INLET PROTECTION, FILTER SACK TYPE
NOT TO SCALE

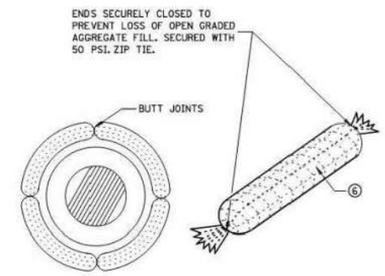

ROCK LOG/COMPOST LOG

NOTES:

SEE SPECS. 2573, 3137, & 3886.

DEVICES MUST BE ADJUSTED ACCORDINGLY AS TO NOT CAUSE FLOODING ON ROADWAY THAT WOULD IMPEDE TRAFFIC FLOW.

1. ALL GEOTEXTILE USED FOR INLET PROTECTION SHALL BE MONOFILAMENT IN BOTH DIRECTIONS, MEETING SPEC. 3886.
2. FINISHED SIZE, INCLUDING POCKETS WHERE REQUIRED SHALL EXTEND A MINIMUM OF 10 INCHES AROUND THE PERIMETER TO FACILITATE MAINTENANCE OR REMOVAL.
3. INSTALLATION NOTES: DO NOT PLACE FILTER BAG INSERT IN INLETS SHALLOWER THAN 30 INCHES, MEASURED FROM THE BOTTOM OF THE INLET TO THE TOP OF THE GRATE. THE PLACED BAG SHALL HAVE A MINIMUM SIDE CLEARANCE OF 3 INCHES BETWEEN THE INLET WALLS AND THE BAG, MEASURED AT THE BOTTOM OF THE OVERFLOW HOLES. WHERE NECESSARY THE CONTRACTOR SHALL CLINCH THE BAG, USING PLASTIC ZIP TIES, TO ACHIEVE THE 3 INCH SIDE CLEARANCE.
4. FLAP POCKETS SHALL BE LARGE ENOUGH TO ACCEPT WOOD 2 INCH X 4 INCH OR USE A ROCK SOCK OR SAND BAGS IN PLACE OF THE FLAP POCKETS.
5. SOCK HEIGHT MUST NOT BE SO HIGH AS TO SLOW DOWN WATER FILTRATION TO CAUSE FLOODING OF THE ROADWAY.
6. GEOTEXTILE SOCK BETWEEN 4-10 FEET LONG AND 4-6 INCH DIAMETER. SEAM TO BE JOINED BY TWO ROWS OF STITCHING WITH A PLASTIC MESH BACKING OR PROVIDE A HEAT BONDED SEAM (OR APPROVED EQUIVALENT), FILL ROCK LOG WITH OPEN GRADED AGGREGATE CONSISTING OF SOUND DURABLE PARTICLES OF COARSE AGGREGATE CONFORMING TO SPEC. 3137 TABLE 3137-1; CA-3 GRADATION.
7. SHALL BE IN ACCORDANCE WITH MNDOT STANDARD PLATE #. INSTALL IN ACCORDANCE WITH MANUFACTURER'S RECOMMENDATIONS. CURBLINE INLET PROTECTION MUST BE IN ACCORDANCE WITH CITY OF SAINT PAUL STD. PLATES 2401, 2402

6 - DETAIL: INLET PROTECTION - FILTER SACK
NOT TO SCALE

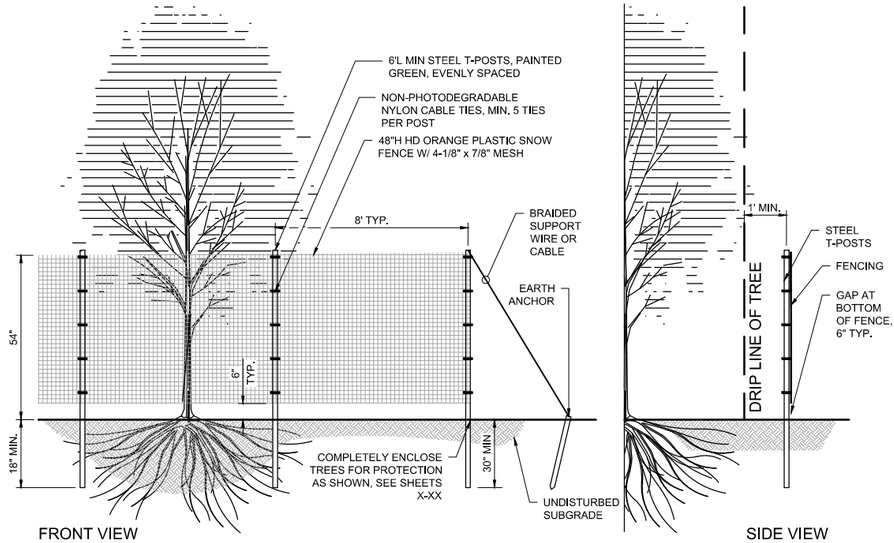

FRONT VIEW

SIDE VIEW

NOTES:
1. ENSURE FENCE IS PULLED TAUGHT BETWEEN POSTS AND ANCHOR SECURELY AS SHOWN. ENSURE CABLE TIES ARE PULLED TAUGHT AGAINST POST TO PREVENT SLIPPING.
2. PROVIDE 6" TYP. SPACE AT BOTTOM OF FENCE AS SHOWN TO PREVENT SMALL ANIMAL ENTRAPMENT IN FENCED AREA.
3. ENSURE CABLE TIES ARE EXTREME WEATHER COLD TEMPERATURE UV STABILIZED TIES.
4. T-POSTS SHALL BE STUDDED FOR CABLE TIE ATTACHMENT.
5. INSPECT FENCE REGULARLY AND REPAIR TO MAINTAIN OR REPLACE AS NECESSARY THROUGHOUT THE TERM OF THE PROJECT.
6. CONTRACTOR TO REMOVE FENCE PRIOR TO FINAL PLANTING OPERATIONS, INCIDENTAL.
7. CONTRACTOR TO STAKE LOCATION FOR REVIEW AND APPROVAL BY LANDSCAPE ARCHITECT.

4 - DETAIL: TREE PROTECTION FENCE
NOT TO SCALE

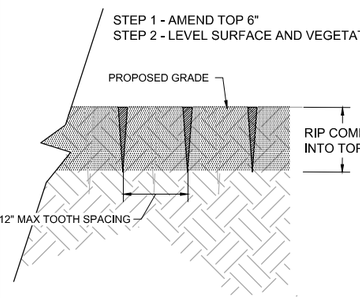

SOIL AMENDMENT NOTES:

SOIL AMENDMENT PROFILE - LOOSENING AND COMPOST APPLICATION PRIOR TO FINAL STABILIZATION:

1. SOIL LOOSENING & AMENDMENT REQUIREMENT APPLIES TO ALL AREAS AS SHOWN ON PLANS (NOT INCLUDING AREAS UNDER EXISTING TREE DRIP-LINES OR WITHIN 5-FEET OF BUILDING FOUNDATIONS), TO RESTORE SOIL PERMEABILITY.
2. NO WHEELED EQUIPMENT SHALL BE USED ON LOOSENED/AMENDED SOIL - WIDE-TRACKED EQUIPMENT ONLY.
3. CONTRACTOR SHALL PROVIDE MINIMUM OF 24-HOUR NOTICE TO ENGINEER TO ARRANGE INSPECTION OF SOIL AMENDMENT PROCESS TO VERIFY SOIL REMEDIATION COMPLIANCE.

2 - DETAIL: SOIL AMENDMENT PROFILE
NOT TO SCALE

ISSUE FOR BID AND PERMITTING

NO.	BY	CHK.	APP.	DATE	REVISION DESCRIPTION

I HEREBY CERTIFY THAT THIS PLAN, SPECIFICATION, OR REPORT WAS PREPARED BY ME OR UNDER MY DIRECT SUPERVISION AND THAT I AM A DULY LICENSED PROFESSIONAL ENGINEER UNDER THE LAWS OF THE STATE OF MINNESOTA.
PRINTED NAME MATTHEW R. METZGER
SIGNATURE
DATE 02/03/2025 LICENSE # 47651

	A	B	C	0	1	2	3
CLIENT							
PERMIT				01/24			
BID				02/25			
CONSTRUCTION							
RECORD							

RELEASED TO/FOR — DATE RELEASED

BARR
Corporate Headquarters: Minneapolis, Minnesota
Ph: 1-800-632-2277

Project Office:
BARR ENGINEERING CO.
4300 MARKETPOINTE DRIVE
SUITE 200
MINNEAPOLIS, MN 55435
Ph: 1-800-632-2277
Fax: (952) 832-2601
www.barr.com

Scale	AS SHOWN
Date	02/03/2025
Drawn	MRM/AMP3
Checked	MRM/MDB3
Designed	MRM/MDB3
Approved	MRM

RAMSEY-WASHINGTON METRO WATERSHED DISTRICT

ROOSEVELT HOMES PHASE 3
SAINT PAUL, MINNESOTA

DETAILS - STANDARD

BARR PROJECT No. 23621477.03
CLIENT PROJECT No.
DWG. No. C-3.0
REV. No. 0

CADD USER: DILLON R. MARTIN FILE: M:\DESIGN\23621477.01\PHASE 2 CAD FILES\23621477_SHEET_C3-X_DETAILS - STANDARD.DWG PLOT SCALE: 1:2 PLOT DATE: 2/3/2025 2:02 PM

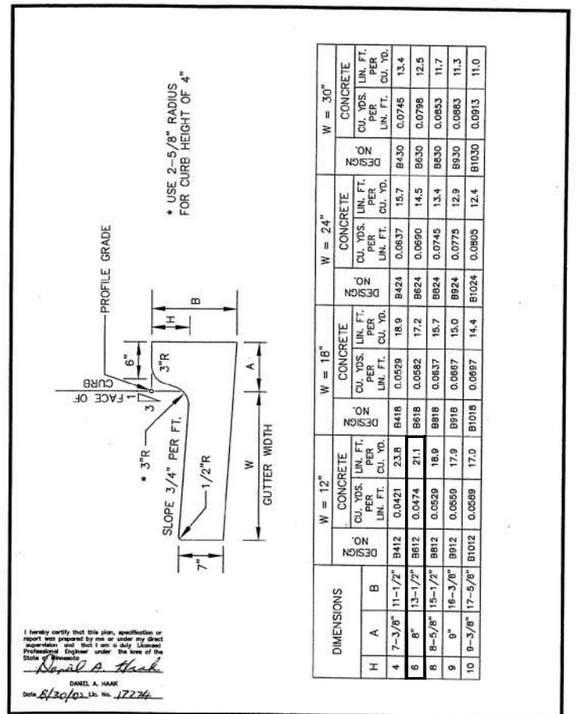

DIMENSIONS		W = 12"			W = 18"			W = 24"			W = 30"		
H	A	B	DESIGN NO.	CONCRETE CU. YDS. PER LIN. FT.	CONCRETE LIN. FT. PER CU. YD.	DESIGN NO.	CONCRETE CU. YDS. PER LIN. FT.	CONCRETE LIN. FT. PER CU. YD.	DESIGN NO.	CONCRETE CU. YDS. PER LIN. FT.	CONCRETE LIN. FT. PER CU. YD.	DESIGN NO.	CONCRETE CU. YDS. PER LIN. FT.	CONCRETE LIN. FT. PER CU. YD.
4	7-3/8"	11-1/2"	B412	0.0421	23.8	B418	0.0529	18.9	B424	0.0637	15.7	B430	0.0745	13.4
6	8"	13-1/2"	B612	0.0474	21.1	B618	0.0582	17.2	B624	0.0690	14.5	B630	0.0798	12.5
8	8-5/8"	15-1/2"	B812	0.0529	18.9	B818	0.0637	15.7	B824	0.0745	13.4	B830	0.0853	11.7
9	9"	16-3/8"	B912	0.0550	17.9	B918	0.0667	15.0	B924	0.0775	12.9	B930	0.0883	11.3
10	8-3/8"	17-5/8"	B1012	0.0589	17.0	B1018	0.0697	14.4	B1024	0.0805	12.4	B1030	0.0913	11.0

I hereby certify that this plan, specification or report was prepared by me or under my direct supervision and that I am a duly Licensed Professional Engineer under the laws of the State of Minnesota.
Daniel A. Haak
DANIEL A. HAAK
Date 8/30/02 Lic. No. 17274

APPROVED	CITY OF ST. PAUL DEPARTMENT OF PUBLIC WORKS	Date of Revision	Standard Plate No.
CITY ENGINEER	CONCRETE CURB AND GUTTER DESIGN B	JULY 2002	3100C

1 DETAIL: CONCRETE CURB AND GUTTER
SCALE AS SHOWN

NOTES:
1. COMPLY WITH ALL MnDOT STANDARDS IN INSTALLATION.
2. ENSURE BASE IS PROPERLY COMPACTED AND TO CORRECT MOISTURE CONTENT PER PROJECT STANDARDS BEFORE INSTALLING CONCRETE.
3. INSTALL EXPANSION JOINTS EVERY 6 FT ALONG ALL SIDEWALKS UNLESS NOTED ON PLAN.
4. INSTALL EXPANSION AND CONTROL JOINTS PER PROJECT DETAILS, TYP.
5. SHALL BE IN ACCORDANCE WITH CITY OF SAINT PAUL STANDARD PLATE 1300D.

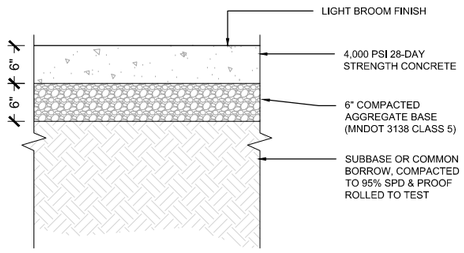

2 DETAIL: CONCRETE WALKS
1"=1'-0"
0 1 2
SCALE IN FEET

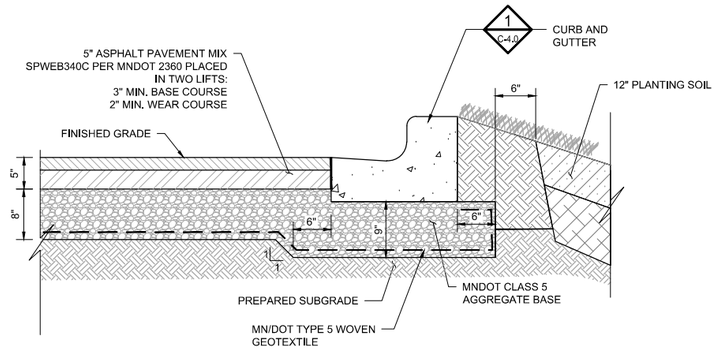

NOTE: ALL BITUMINOUS PAVEMENT AND CONCRETE CURB AND GUTTER SHALL BE IN ACCORDANCE WITH CITY OF SAINT PAUL STANDARD SPECIFICATIONS

3 DETAIL: MEDIUM DUTY BITUMINOUS PAVING
1"=1'-0"
0 1 2

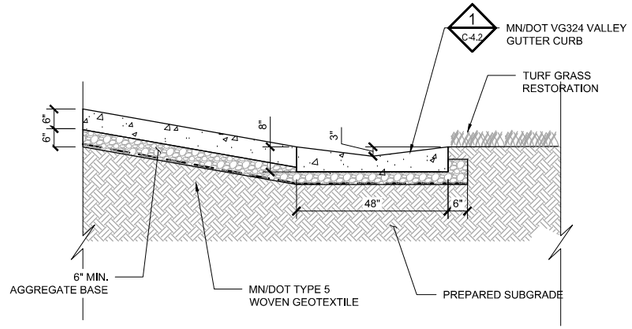

4 SECTION: VALLEY GUTTER
NOT TO SCALE

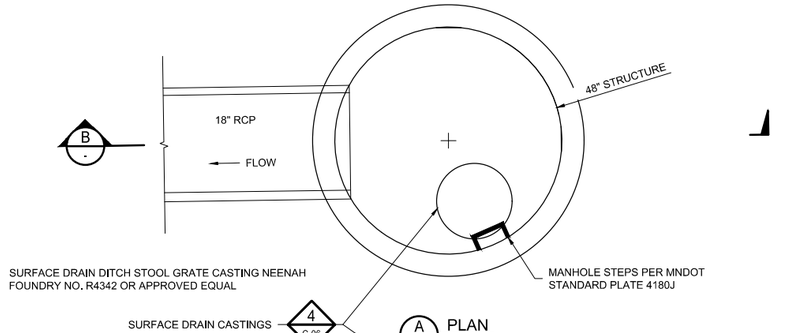

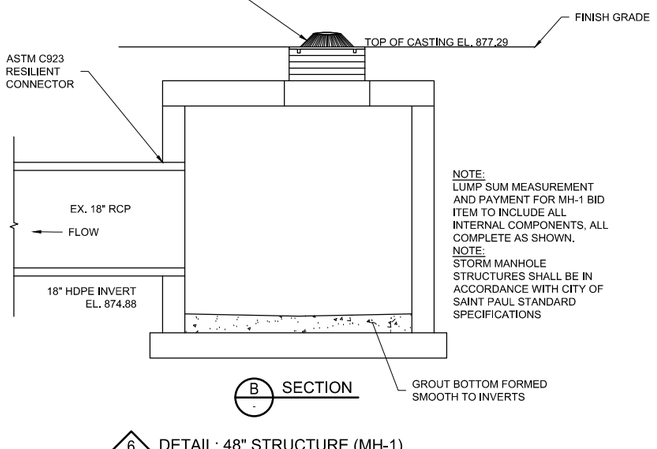

NOTE:
LUMP SUM MEASUREMENT AND PAYMENT FOR MH-1 BID ITEM TO INCLUDE ALL INTERNAL COMPONENTS, ALL COMPLETE AS SHOWN.
NOTE:
STORM MANHOLE STRUCTURES SHALL BE IN ACCORDANCE WITH CITY OF SAINT PAUL STANDARD SPECIFICATIONS

6 DETAIL: 48" STRUCTURE (MH-1)

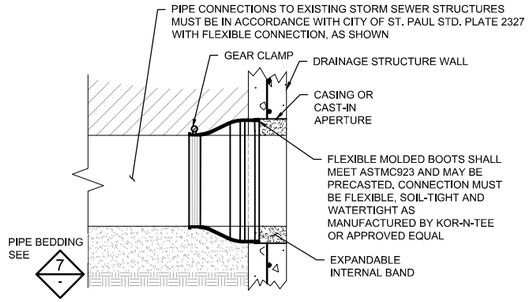

5 DETAIL: TIE STORM SEWER INTO EXISTING
NOT TO SCALE

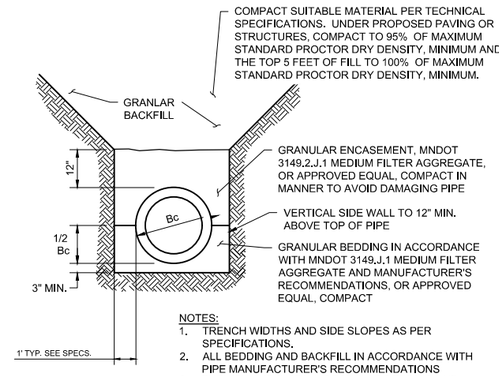

NOTES:
1. TRENCH WIDTHS AND SIDE SLOPES AS PER SPECIFICATIONS.
2. ALL BEDDING AND BACKFILL IN ACCORDANCE WITH PIPE MANUFACTURER'S RECOMMENDATIONS
3. FURNISH AND INSTALL GRANULAR BEDDING AND GRANULAR ENCASEMENT FOR ALL STORM SEWER (RCP AND HDPE)
4. THIS DETAIL DOES NOT APPLY TO PERFORATED UNDERDRAIN PIPING
5. CLASS 'D' PIPE BEDDING MUST BE IN ACCORDANCE WITH CITY OF ST PAUL STD. PLATE 2317E

NOTE:
CONTRACTOR SHALL SUBMIT SHOP DRAWING OF MODIFICATION TO MANHOLE STRUCTURE AFTER FIELD INSPECTION. CITY MANHOLE MODIFICATIONS MUST BE IN ACCORDANCE WITH CITY OF SAINT PAUL STANDARD PLATE: 2322F MANHOLE RECONSTRUCT OR 2321D MANHOLE ADJUST. MANHOLE FRAME SAINT PAUL STANDARD PLATE 2201E FRAME "A" AND INLET CASTING SAINT PAUL STANDARD PLATE 2203 CASTING "D".

7 DETAIL: CL54 DIP STORM SEWER PIPE CULVERT TRENCH AND BEDDING
NOT TO SCALE

ISSUE FOR BID AND PERMITTING

NO.	BY	CHK. APP.	DATE	REVISION DESCRIPTION

I HEREBY CERTIFY THAT THIS PLAN, SPECIFICATION, OR REPORT WAS PREPARED BY ME OR UNDER MY DIRECT SUPERVISION AND THAT I AM A DULY LICENSED PROFESSIONAL ENGINEER UNDER THE LAWS OF THE STATE OF MINNESOTA.
PRINTED NAME MATTHEW R. METZGER
SIGNATURE
DATE 02/03/2025 LICENSE # 47651

	A	B	C	0	1	2	3
CLIENT							
PERMIT				01/24			
BID				02/25			
CONSTRUCTION							
RECORD							

RELEASED TO/FOR — DATE RELEASED

BARR
Corporate Headquarters:
Minneapolis, Minnesota
Ph: 1-800-632-2277
Project Office:
4300 MARKETPOINTE DRIVE
SUITE 200
MINNEAPOLIS, MN 55435
Ph: 1-800-632-2277
Fax: (952) 832-2601
www.barr.com

Scale	AS SHOWN
Date	02/03/2025
Drawn	MRM/AMP3
Checked	MRM/MDB3
Designed	MRM/MDB3
Approved	MRM

RAMSEY-WASHINGTON METRO WATERSHED DISTRICT

ROOSEVELT HOMES PHASE 3
SAINT PAUL, MINNESOTA

DETAILS - CIVIL

BARR PROJECT No.	
23621477.03	
CLIENT PROJECT No.	
DWG. No.	REV. No.
C-4.0	0

CADD USER: DILLON R. MARTIN FILE: M:\DESIGN\23621477.01\PHASE 2 CAD FILES\23621477_SHEET_C4.X_DETAILS - TRENCH DRAIN.DWG PLOT SCALE: 1:2 PLOT DATE: 2/3/2025 2:00 PM

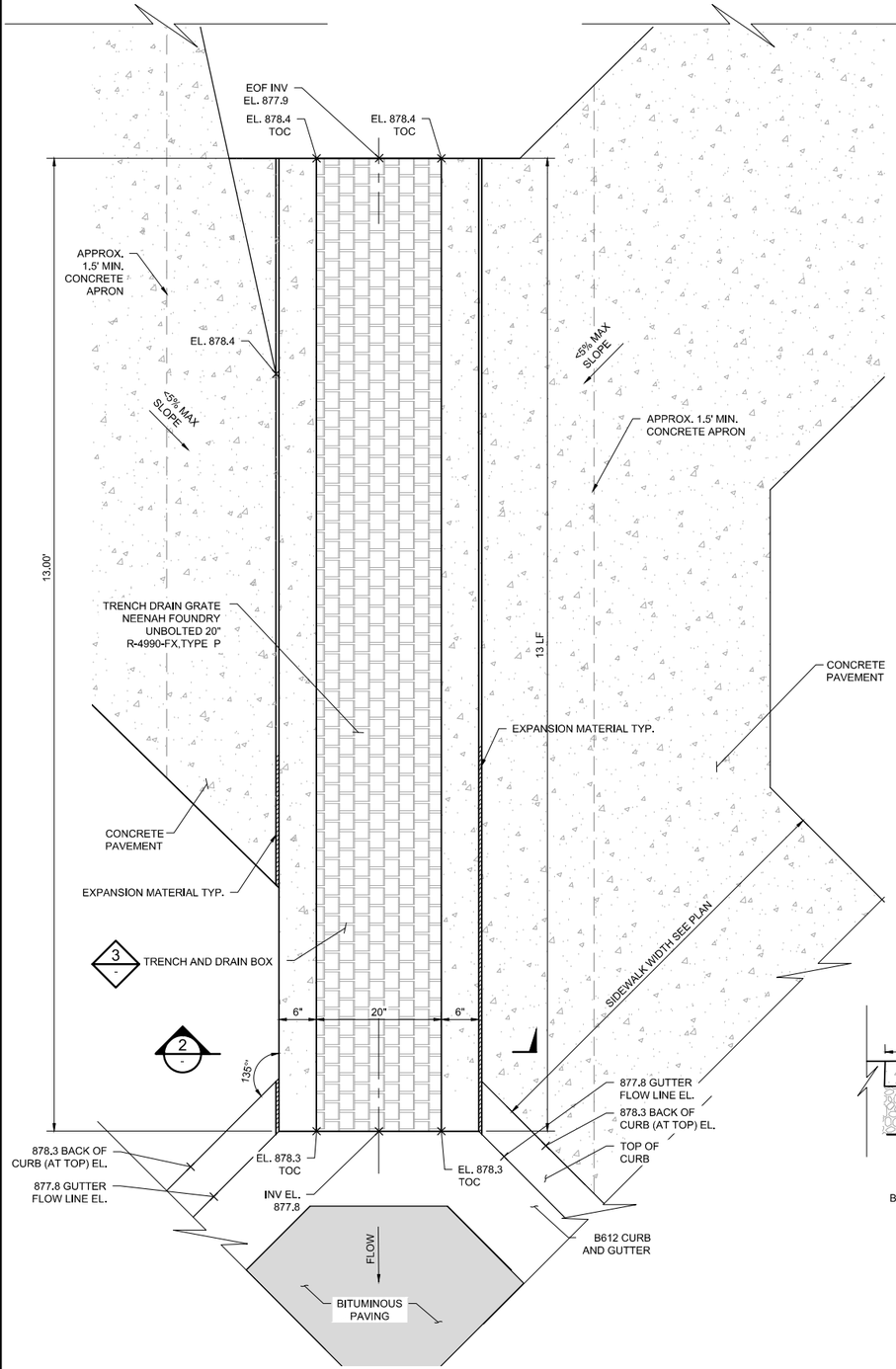

1 – DETAIL: TRENCH DRAIN #1
NOT TO SCALE

R-4990
HEAVY DUTY TRENCH

Materials: All frames and grates/lids are furnished standard in gray iron, meeting ASTM-A48 Class 35-B for heavy-duty use. For extra heavy-duty use or superior durability requirements, see our ductile iron Airport and Port Grating Series on page 286.

Neenah recommends project designers avoid the use of light duty trench installations because it is likely that applications will be subjected to heavy delivery vehicle traffic at some time. Furthermore, the use of a site could be changed to heavy duty use patterns at some unanticipated future date.

Dimensions in inches

Un-Bolted Catalog No.	A	B	C	Type A	Type C	Type D	Type E	Type P	Type Q
R-4990-AX	8	1 1/2	6	x	x	x	x	x	
R-4990-BX	10	1 1/2	8	x	x	x	x	x	
R-4990-CX	12	1 1/2	10	x	x	x	x	x	x
R-4990-DX	14	1 1/2	12	x	x	x	x	x	x
R-4990-EX	17	1 1/2	15	x	x	x	x	x	
R-4990-FX	20	1 1/2	18	x	x	x	x	x	
R-4990-GX	23	1 1/2	21	x	x*	x			
R-4990-HX	26	1 1/2	24	x	x*	x	x		x
R-4990-JX	30	2	27	x	x	x			
R-4990-KX	33	2	30	x	x	x*	x		
R-4990-LX	36	2	33	x	x	x*			
R-4990-MX	39	2	36	x	x*	x			
R-4990-NX	45	2	42	x	x*	x			
R-4990-OX	51	2	48	x		x*			

x - Indicates availability.
* Deep Ribs (consult shop drawing for dimensions).
Deep Ribs = "B" dimension times 2 or greater.

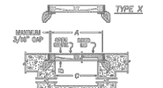

General schematic shows may not apply to all designs. Bar and rib depths, plate thicknesses and seating widths vary on different sizes and styles. If your project has design restrictions, contact your sales representative or product engineering.



Illustrating Type C trench. Trench sections are furnished in 24" standard lengths.

Note: In Type A and P grates the slots are perpendicular to the trench run. In Type C and Q grates the slots are parallel with the trench run.

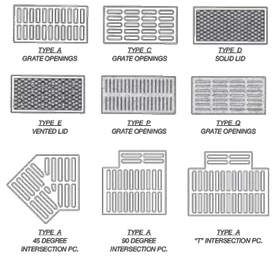

Note: 45°, 90° and "T" available in limited sizes and types.

Read Carefully Before Ordering

The various standard trench drains are available with a number of alternatives. It is important to examine all of the variables carefully and specify your requirements fully. Your order will be entered correctly and promptly if it includes the following information:

- Complete catalog number
- Frame and pieces, when required
- Type of Lid or Grate: A, C, D, E, P or Q
- Length of trench sections
- Angles and intersections *
- Load requirements

*Trenches with angles, intersections, size changes or other special requirements require detail drawings prior to ordering. Contact your sales representative or product engineering for assistance.

800-558-5075

CLICK HERE to return to the Table of Contents

Suggested Forming Instructions for R-4990 Frame and Grate/Lid

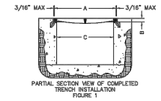

FIGURE 1

Unbolted Units

A typical installation is shown in Figure 1. Details and suggestions are based on using the Neenah Foundry Type X Frame.

Materials

Under normal situations, use ¾ inch plywood for forming walls. 2x4s are suitable for studs, plates, bracing and spreaders.

Forming Procedures

Pour the floor slab of the trench according to the plans and specifications. The width of the forming, (see Figure 2) measured from the outside edges of the forms, corresponds to the "C" dimension on Figure 1. During the entire forming procedure, verify that the forms are plumb, straight, solid and level.

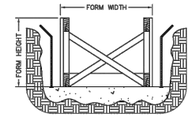

FIGURE 2

The height of the form corresponds to the final grade elevation. Extend the spreaders beyond the edge of the forms (see Figure 3 and 4) to provide a stop for the frame and seat form.

To attach the cast iron frame to the forming, the use of a "seat form" is recommended to assure that the frame is at the proper elevation and true. The seat form has the same dimensions as the frame, with the height corresponding to the frame height (the "B" dimension), and the width the same as the seat width of the frame. The seat width should be field measured to assure as proper fit. All Neenah frames have a slight radius at the corner of the seat and vertical face so the seat form should be beveled to accommodate the radius. Most 2x4's have this radius.

Nail the seat form to the frame using the holes in the frame. (Figures 3 & 4)

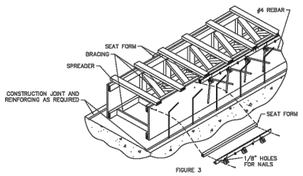

FIGURE 3

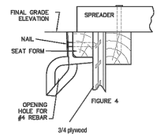

FIGURE 4

(The rebar shown in the vertical walls of the trench is for illustrative purposes only. Proper sizing and placement is the responsibility of the engineering firm providing the project design.)

Frames should butt together snugly, leaving as little gap as possible. Place a 90 degree bent #4 rebar through the holes in the anchor lugs to provide anchorage in the concrete. Verify the space between the edges of the grate and frame so grates will fit properly. There should be a gap but no greater than 3/16" (see Figure 1).

Pour concrete and use the top edge of the frame as a screed point.

CLICK HERE to return to the Table of Contents

3 – DETAIL: TRENCH DRAIN AND BOX INSTALLATION (UNBOLTED)
NOT TO SCALE

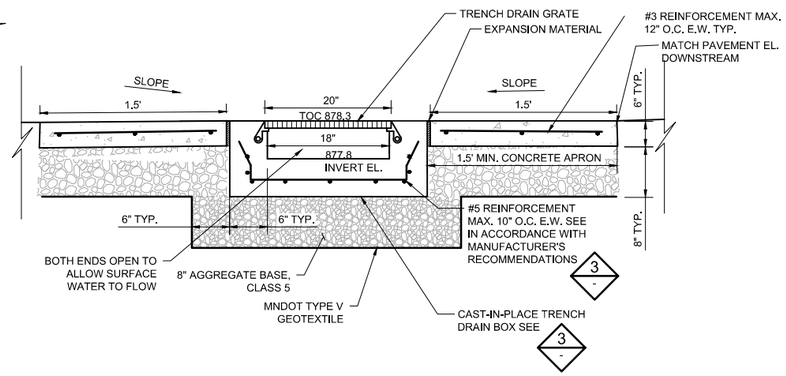

2 – SECTION: TRENCH DRAIN #1
NOT TO SCALE

ISSUE FOR BID
AND PERMITTING

NO.	BY	CHK.	APP.	DATE	REVISION DESCRIPTION

I HEREBY CERTIFY THAT THIS PLAN, SPECIFICATION, OR REPORT WAS PREPARED BY ME OR UNDER MY DIRECT SUPERVISION AND THAT I AM A DULY LICENSED PROFESSIONAL ENGINEER UNDER THE LAWS OF THE STATE OF MINNESOTA.

PRINTED NAME MATTHEW R. METZGER
SIGNATURE
DATE 02/03/2025 LICENSE # 47651

	A	B	C	0	1	2	3
CLIENT							
PERMIT				01/24			
BID				02/25			
CONSTRUCTION							
RECORD							
RELEASED TO/FOR	DATE RELEASED						

BARR
Corporate Headquarters:
Minneapolis, Minnesota
Ph: 1-800-632-2277

Project Office:
4300 MARKETPOINTE DRIVE
SUITE 200
MINNEAPOLIS, MN 55435
Ph: 1-800-632-2277
Fax: (952) 832-2601
www.barr.com

Scale	AS SHOWN
Date	02/03/2025
Drawn	MRM/AMP3
Checked	MRM/MDB3
Designed	MRM/MDB3
Approved	MRM

RAMSEY-WASHINGTON
METRO WATERSHED DISTRICT

ROOSEVELT HOMES PHASE 3
SAINT PAUL, MINNESOTA

DETAILS - CIVIL

BARR PROJECT No.	23621477.03
CLIENT PROJECT No.	
DWG. No.	C-4.1
REV. No.	0

CADD USER: DILLON R. MARTIN FILE: M:\DESIGN\23621477.01\PHASE 2 CAD FILES\23621477_SHEET_C4.X_DETAILS - TRENCH DRAIN.DWG PLOT SCALE: 1:2 PLOT DATE: 2/3/2025 1:59 PM

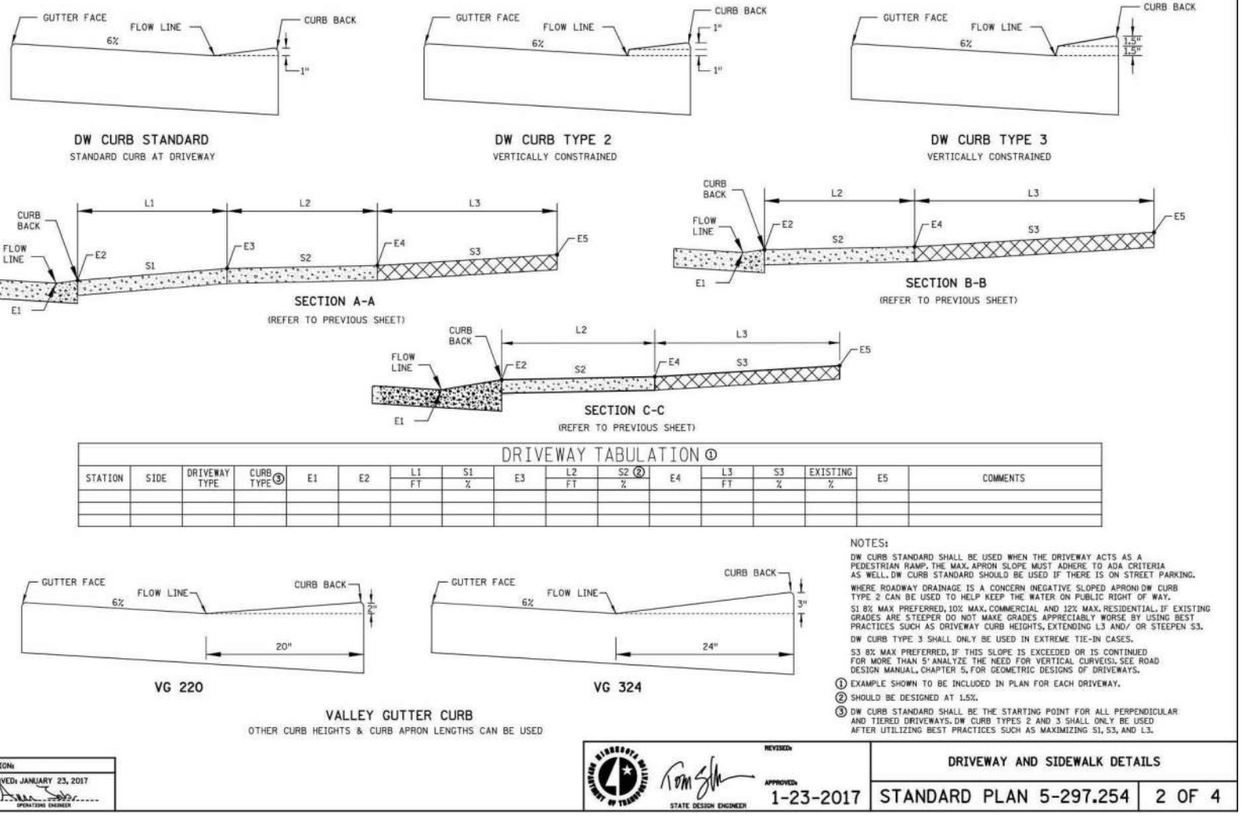

DRIVEWAY TABULATION ①

STATION	SIDE	DRIVEWAY TYPE	CURB TYPE ③	E1	E2	L1 FT	S1 %	E3	L2 FT	S2 ② %	E4	L3 FT	S3 %	EXISTING %	E5	COMMENTS

NOTES:

DW CURB STANDARD SHALL BE USED WHEN THE DRIVEWAY ACTS AS A PEDESTRIAN RAMP. THE MAX. APRON SLOPE MUST ADHERE TO ADA CRITERIA AS WELL. DW CURB STANDARD SHOULD BE USED IF THERE IS ON STREET PARKING.

WHERE ROADWAY DRAINAGE IS A CONCERN (NEGATIVE SLOPED APRON) DW CURB TYPE 2 CAN BE USED TO HELP KEEP THE WATER ON PUBLIC RIGHT OF WAY.

S1 8% MAX PREFERRED, 10% MAX. COMMERCIAL AND 12% MAX. RESIDENTIAL. IF EXISTING GRADES ARE STEEPER DO NOT MAKE GRADES APPRECIABLY WORSE BY USING BEST PRACTICES SUCH AS DRIVEWAY CURB HEIGHTS, EXTENDING L3 AND/ OR STEEPEN S3.

DW CURB TYPE 3 SHALL ONLY BE USED IN EXTREME TIE-IN CASES.

S3 8% MAX PREFERRED, IF THIS SLOPE IS EXCEEDED OR IS CONTINUED FOR MORE THAN 5' ANALYZE THE NEED FOR VERTICAL CURVES). SEE ROAD DESIGN MANUAL, CHAPTER 5, FOR GEOMETRIC DESIGNS OF DRIVEWAYS.

① EXAMPLE SHOWN TO BE INCLUDED IN PLAN FOR EACH DRIVEWAY.

② SHOULD BE DESIGNED AT 1.5%.

③ DW CURB STANDARD SHALL BE THE STARTING POINT FOR ALL PERPENDICULAR AND TIERED DRIVEWAYS. DW CURB TYPES 2 AND 3 SHALL ONLY BE USED AFTER UTILIZING BEST PRACTICES SUCH AS MAXIMIZING S1, S3, AND L3.

REVISION:
APPROVED JANUARY 23, 2017
OPERATIONS ENGINEER

REVISED:
APPROVED: 1-23-2017
STATE DESIGN ENGINEER

DRIVEWAY AND SIDEWALK DETAILS

STANDARD PLAN 5-297.254 | 2 OF 4

1 DETAIL: MN/DOT VG 324 VALLEY GUTTER CURB

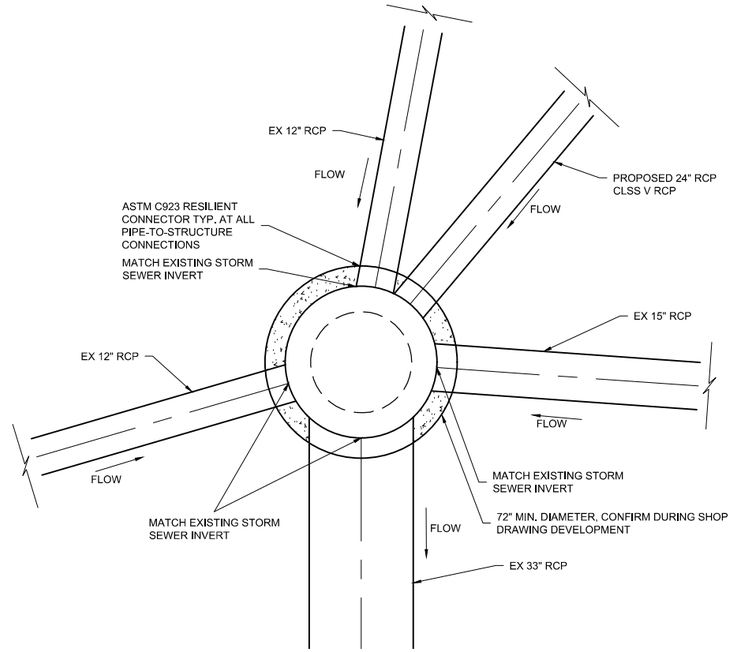

2 PLAN: STORM MANHOLE STRUCTURE MH-2

SCALE IN FEET 0 1 2 3 4

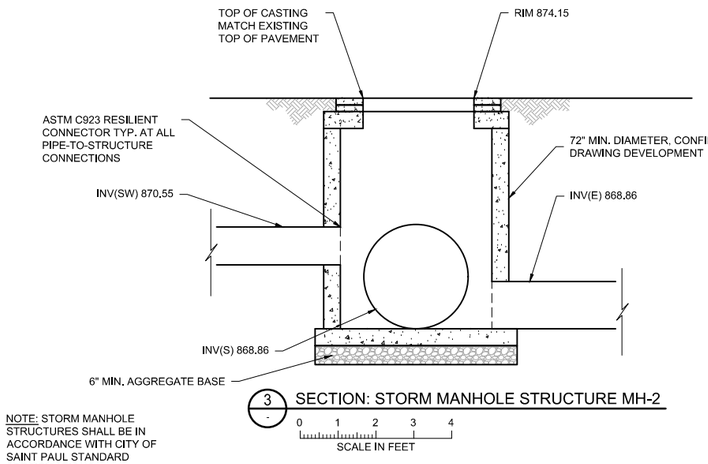

3 SECTION: STORM MANHOLE STRUCTURE MH-2

SCALE IN FEET 0 1 2 3 4

NOTES:
1. CONTRACTOR SHALL SUBMIT SHOP DRAWING OF MODIFICATION TO MANHOLE STRUCTURE AFTER FIELD INSPECTION. CITY MANHOLE MODIFICATIONS MUST BE IN ACCORDANCE WITH CITY OF SAINT PAUL STANDARD PLATE: 2322F MANHOLE RECONSTRUCT OR 2321D MANHOLE ADJUST, MANHOLE FRAME SAINT PAUL STANDARD PLATE 2201E FRAME "A" AND INLET CASTING SAINT PAUL STANDARD PLATE 2203 CASTING "D".
2. STRUCTURE DESIGN BY PRECASTER, SHALL BE DESIGNED FOR HS-25 STRUCTURAL LOADING, MINIMUM

NOTE: STORM MANHOLE STRUCTURES SHALL BE IN ACCORDANCE WITH CITY OF SAINT PAUL STANDARD SPECIFICATIONS

ISSUE FOR BID
AND PERMITTING

NO.	BY	CHK.	APP.	DATE	REVISION DESCRIPTION

I HEREBY CERTIFY THAT THIS PLAN, SPECIFICATION, OR REPORT WAS PREPARED BY ME OR UNDER MY DIRECT SUPERVISION AND THAT I AM A DULY LICENSED PROFESSIONAL ENGINEER UNDER THE LAWS OF THE STATE OF MINNESOTA.

PRINTED NAME MATTHEW R. METZGER
SIGNATURE
DATE 02/03/2025 LICENSE # 47651

CLIENT								
PERMIT				01/24				
BID				02/25				
CONSTRUCTION								
RECORD								
RELEASED TO/FOR	A	B	C	0	1	2	3	DATE RELEASED

BARR
Corporate Headquarters:
Minneapolis, Minnesota
Ph: 1-800-632-2277

Project Office:
4300 MARKETPOINTE DRIVE
SUITE 200
MINNEAPOLIS, MN 55435
Ph: 1-800-632-2277
Fax: (952) 832-2601
www.barr.com

Scale	AS SHOWN
Date	02/03/2025
Drawn	MRM/AMP3
Checked	MRM/MDB3
Designed	MRM/MDB3
Approved	MRM

RAMSEY-WASHINGTON METRO WATERSHED DISTRICT

ROOSEVELT HOMES PHASE 3
SAINT PAUL, MINNESOTA

DETAILS - CIVIL

BARR PROJECT No.	23621477.03
CLIENT PROJECT No.	
DWG. No.	C-4.2
REV. No.	0

CADD USER: DILLON R. MARTIN FILE: M:\DESIGN\23621477.01\PHASE 2 CAD FILES\23621477_SHEET_C4-X_DETAILS - TRENCH DRAIN.DWG PLOT SCALE: 1:2 PLOT DATE: 2/3/2025 1:59 PM
DISTRICT *, DISTRICT *
USER NAME: ##ed/SERNAME###
PATH & FILENAME: Document:/Operations/ADA_Review/ADA_Design Guidelines/ADAEspooStandards/spoodetails&spoodfiles/2306&spoodetails&spoodfiles/2306&spoodetails&spoodfiles/
FILE NAME: @FILENAME@
PLOTTED/REVISED:

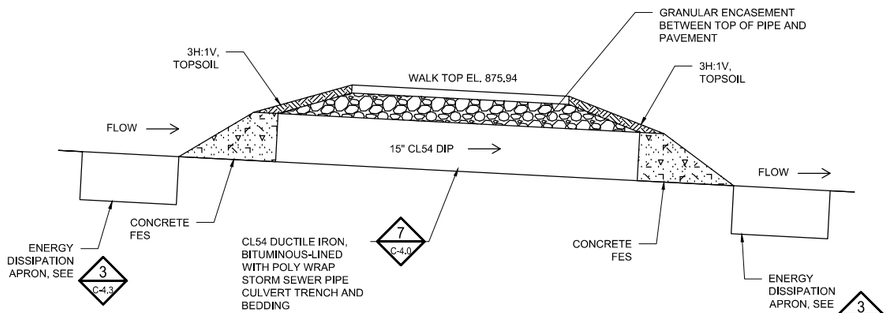

1 - DETAIL: CULVERT SIDEWALK CROSSING
NOT TO SCALE

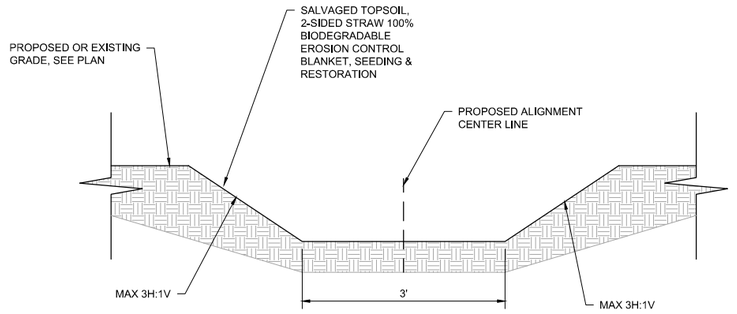

2 - DETAIL: DRAINAGE SWALE
NOT TO SCALE

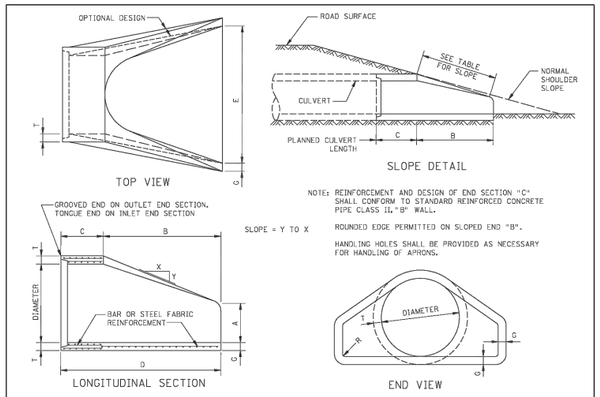

NOTE: REINFORCEMENT AND DESIGN OF END SECTION "C" SHALL CONFORM TO STANDARD REINFORCED CONCRETE PIPE CLASS II, "B" WALL.

ROUNDED EDGE PERMITTED ON SLOPED END "B".

HANDLING HOLES SHALL BE PROVIDED AS NECESSARY FOR HANDLING OF APRONS.

SEE STD PLATE 3000 FOR ADDITIONAL REQUIREMENTS

DIAM.	WEIGHT PER SECTION (LBS.)	APPROX. SLOPE Y TO X	T	A	B	C	D	E	G	R	Ⓢ
12"	530	1 TO 2.4	2"	4"	24"	48-7/8"	72-7/8"	24"	2"	1-1/2"	0.07
15"	740	1 TO 2.4	2-1/4"	6"	27"	46"	73"	30"	2-1/2"	1-1/2"	0.07
18"	980	1 TO 2.3	2-7/8"	9"	27"	46"	73"	36"	2-1/2"	1-1/2"	0.07
21"	1280	1 TO 2.4	2-3/4"	9"	36"	37-1/2"	73-1/2"	42"	2-3/4"	1-1/2"	0.07
24"	1520	1 TO 2.5	3"	9-1/2"	43-1/2"	30"	73-1/2"	48"	3"	1-1/2"	0.07
27"	1930	1 TO 2.5	3-1/4"	10-1/2"	49-1/2"	24"	73-1/2"	54"	3-1/4"	1-1/2"	0.13
30"	2190	1 TO 2.5	3-1/2"	12"	54"	19-3/4"	73-3/4"	60"	3-1/2"	1-1/2"	0.14
36"	4100	1 TO 2.5	4"	15"	63"	34-3/4"	97-3/4"	72"	4"	1-1/2"	0.12
42"	5380	1 TO 2.5	4-1/2"	21"	63"	35"	98"	78"	4-1/2"	1-1/2"	0.15
48"	6550	1 TO 2.5	5"	24"	72"	26"	98"	84"	5"	1-1/2"	0.18
54"	8240	1 TO 2.0	5-1/2"	27"	65"	33-1/4"	98-1/4"	90"	5-1/2"	1-1/2"	0.22
60"	8730	1 TO 1.9	6"	35"	60"	39"	99"	96"	5"	1-1/2"	0.25
66"	10710	1 TO 1.7	6-1/2"	30"	72"	27"	99"	102"	5-1/2"	1-1/2"	0.31
72"	12520	1 TO 1.8	7"	36"	78"	21"	99"	108"	6"	1-1/2"	0.35
78"	14770	1 TO 1.8	7-1/2"	36"	90"	21"	111"	114"	6-1/2"	1-1/2"	0.40
84"	18160	1 TO 1.6	8"	36"	90-1/2"	21"	111-1/2"	120"	6-1/2"	1-1/2"	0.46
90"	20900	1 TO 1.5	8-1/2"	41"	87-1/2"	24"	111-1/2"	132"	6-1/2"	6"	0.51

Ⓢ CONTINUOUS BASIC REINFORCEMENT IN SQ. IN. PER LINEAL FT. FOR SLOPED END "B" (LARGER OF INNER OR OUTER CAGE ON STD. PLATE 3000). FOR WALL THICKNESSES LESS THAN 4", LOCATE REINFORCEMENT AT THE CENTER OF WALL. FOR WALL THICKNESSES 4" AND GREATER, LOCATE REINFORCEMENT WITH A MIN. OF 2" OF COVER MEASURED FROM THE OUTSIDE OF THE WALL.

NOTE: UNLESS SPECIFIED OTHERWISE IN THE PLANS, WHEN AN APRON IS REQUIRED FOR A RUN OF GASKET PIPE (STD. PLATE 3006), THE PRODUCER MAY FURNISH EITHER:
1. AN APRON WITH A STD. PLATE 3006 JOINT, OR
2. AN APRON WITH A STD. PLATE 3000 JOINT AND THE END OF THE STD. PLATE 3006 PIPE CONNECTING TO THE APRON PROVIDED WITH A STD. PLATE 3000 JOINT. THIS JOINT IS TO BE SEALED WITH A PREFORMED MASTIC SEALER.

APPROVED May 8, 1985
K H Sullivan
Assistant Division Director Technical Services

STATE OF MINNESOTA
DEPARTMENT OF TRANSPORTATION
CONCRETE APRON FOR REINFORCED CONCRETE PIPE

SPECIFICATION REFERENCE: 2501, 2503
REVISED 10-16-2000 A.K.J.

STANDARD PLATE NO. 3100G

5 - DETAIL: FES MNDOT STANDARD PLATE #3100G
NOT TO SCALE

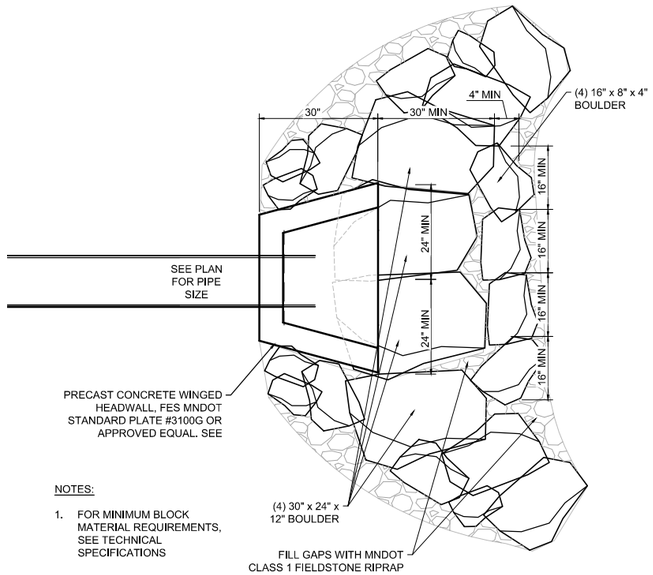

3 - DETAIL: DUCTILE IRON PIPE FES W/ ENERGY DISSIPATION APRON
NOT TO SCALE

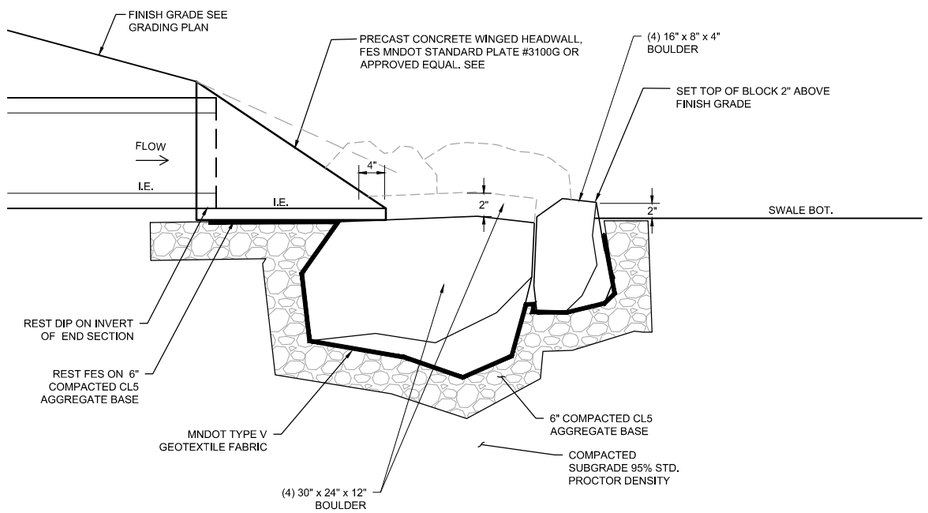

4 - DETAIL: DUCTILE IRON PIPE FES W/ ENERGY DISSIPATION APRON
NOT TO SCALE

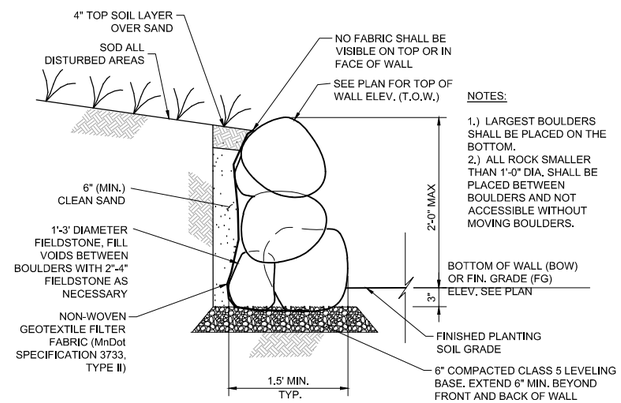

6 - SECTION: GRAVITY BOULDER WALL
NOT TO SCALE

ISSUE FOR BID AND PERMITTING

NO.	BY	CHK.	APP.	DATE	REVISION DESCRIPTION

I HEREBY CERTIFY THAT THIS PLAN, SPECIFICATION, OR REPORT WAS PREPARED BY ME OR UNDER MY DIRECT SUPERVISION AND THAT I AM A DULY LICENSED PROFESSIONAL ENGINEER UNDER THE LAWS OF THE STATE OF MINNESOTA.
PRINTED NAME MATTHEW R. METZGER
SIGNATURE
DATE 02/032025 LICENSE # 47651

	A	B	C	0	1	2	3
CLIENT							
PERMIT				01/24			
BID				02/25			
CONSTRUCTION							
RECORD							

RELEASED TO/FOR — DATE RELEASED

BARR
Corporate Headquarters: Minneapolis, Minnesota
Ph: 1-800-632-2277
Project Office:
4300 MARKETPOINTE DRIVE
SUITE 200
MINNEAPOLIS, MN 55435
Ph: 1-800-632-2277
Fax: (952) 832-2601
www.barr.com

Scale	AS SHOWN
Date	02/03/2025
Drawn	MRM/AMP3
Checked	MRM/MDB3
Designed	MRM/MDB3
Approved	MRM

RAMSEY-WASHINGTON METRO WATERSHED DISTRICT

ROOSEVELT HOMES PHASE 3
SAINT PAUL, MINNESOTA

DETAILS - CIVIL

BARR PROJECT No. 23621477.03
CLIENT PROJECT No.
DWG. No. C-4.3
REV. No. 0

CADD USER: DILLON R. MARTIN FILE: M:\DESIGN\23621477.01\PHASE 2 CAD FILES\23621477_SHEET_C4.X_DETAILS - TRENCH DRAIN.DWG PLOT SCALE: 1:2 PLOT DATE: 2/3/2025 1:59 PM

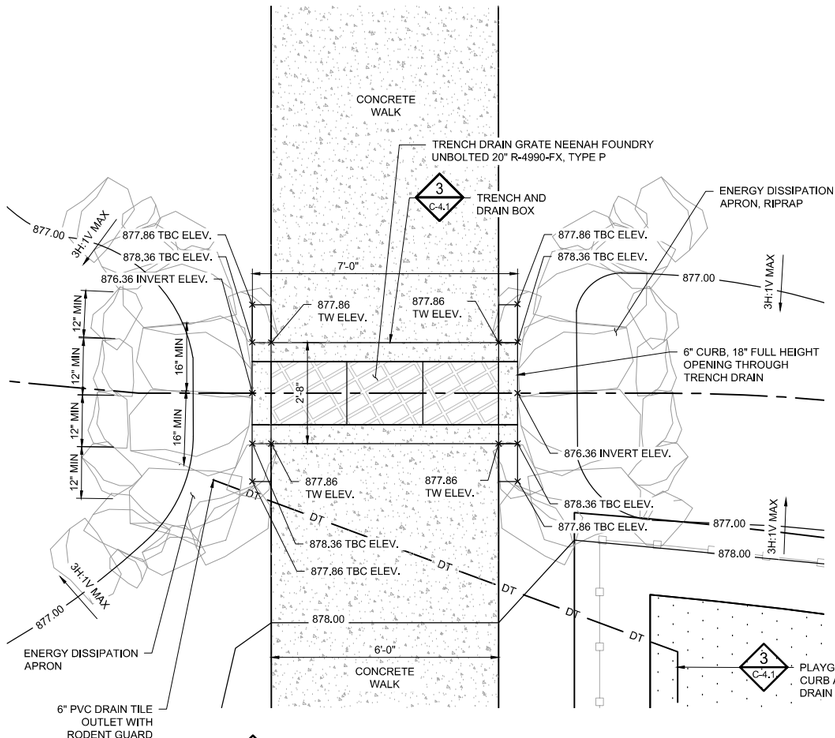

1 – DETAIL: TRENCH DRAIN #2

0 1 2 3 4
SCALE IN FEET

LEGEND

TW 879.5 PROPOSED SPOT ELEVATION (IN FT) TOP OF WALK

TBC 879.5 PROPOSED SPOT ELEVATION (IN FT) TOP BACK OF CURB

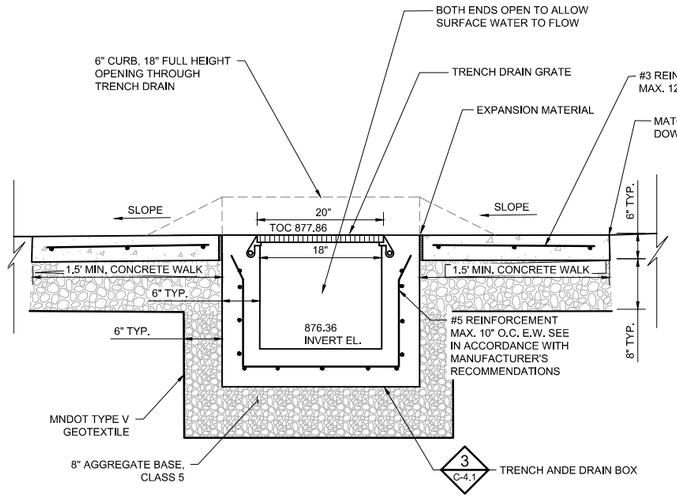

2 – SECTION: TRENCH DRAIN #2
NOT TO SCALE

NOTES:

1. ALL FENCING COMPONENTS, INCLUDING POSTS, RAILS, MESH, TENSION BARS AND BANDS, CAPS, AND OTHER APPURTENANCES AS AVAILABLE SHALL BE VINYL COATED BLACK COLOR IN ACCORDANCE WITH MnDOT SPECIFICATIONS 3376, 3406, AND PER PROJECT SPECIFICATIONS.
2. PROVIDE SLEEVES AS REQUIRED FOR TRANSITIONS BETWEEN ADJACENT TOP AND BOTTOM RAIL SECTIONS. SLEEVE COLOR AND FINISH TO MATCH RAILS.
3. CONCRETE FOR FOOTINGS SHALL BE MIX 3G52 4500 PSI AIR-ENTRAINED CONCRETE PER MnDOT SPEC 2461.

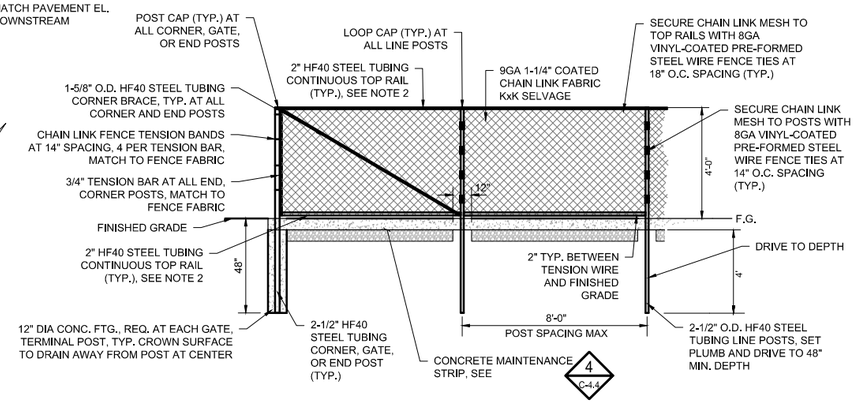

3 – DETAIL: 4' CHAIN LINK FENCE
NOT TO SCALE

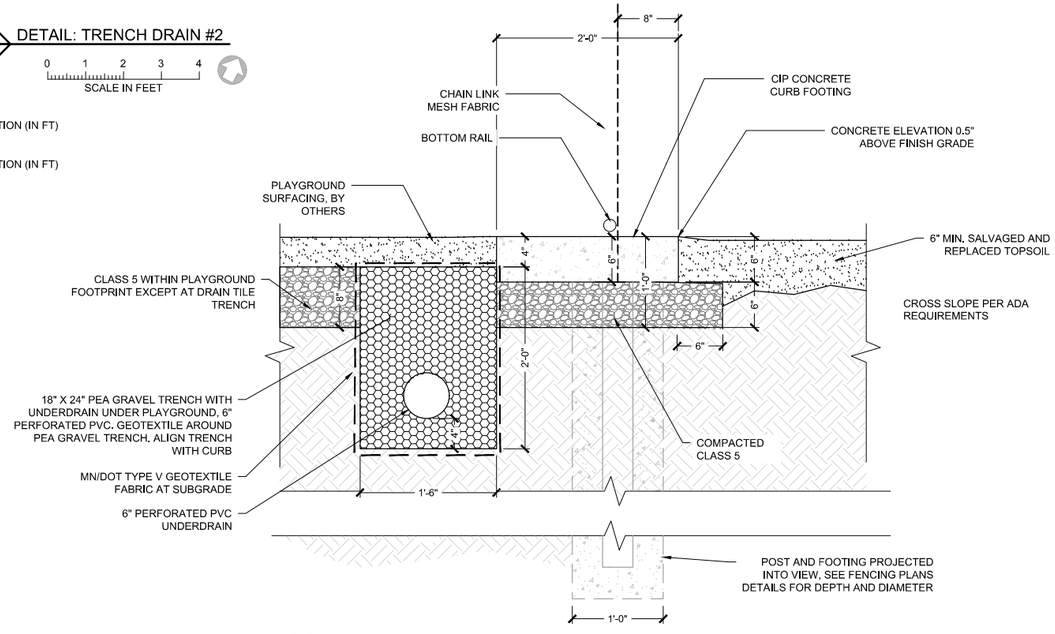

4 – SECTION: PLAYGROUND CURB AND DRAIN TILE

0 10 20
SCALE IN FEET

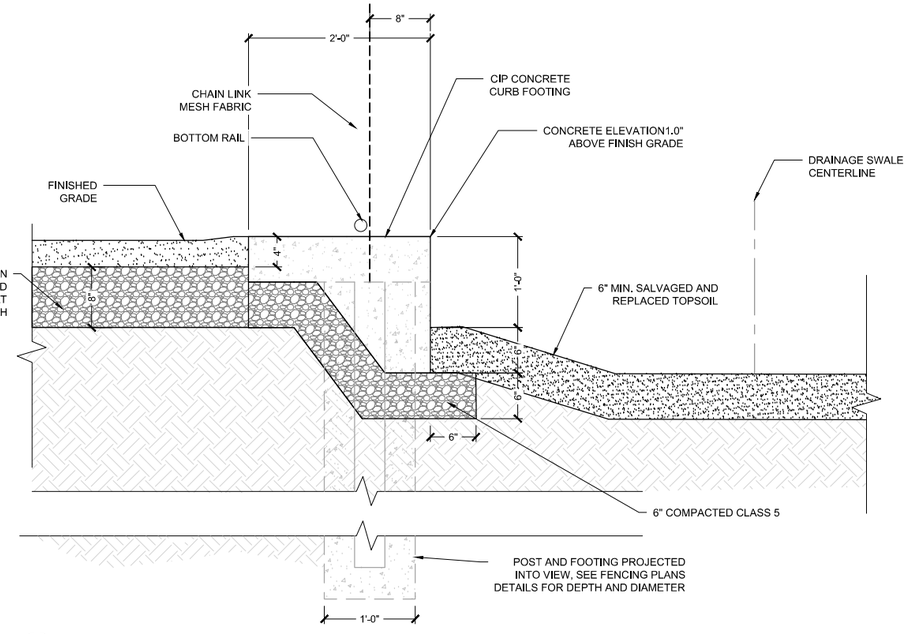

4 – SECTION: PLAYGROUND CURB, THICKED BASE

0 10 20
SCALE IN FEET

ISSUE FOR BID
AND PERMITTING

NO.	BY	CHK.	APP.	DATE	REVISION DESCRIPTION

I HEREBY CERTIFY THAT THIS PLAN, SPECIFICATION, OR REPORT WAS PREPARED BY ME OR UNDER MY DIRECT SUPERVISION AND THAT I AM A DULY LICENSED PROFESSIONAL ENGINEER UNDER THE LAWS OF THE STATE OF MINNESOTA.

PRINTED NAME MATTHEW R. METZGER

SIGNATURE Matthew R. Metzger

DATE 02/03/2025 LICENSE # 47651

CLIENT								
PERMIT				01/24				
BID				02/25				
CONSTRUCTION								
RECORD								
RELEASED TO/FOR	A	B	C	0	1	2	3	DATE RELEASED

BARR
Corporate Headquarters: Minneapolis, Minnesota
Ph: 1-800-632-2277

Project Office:
4300 MARKETPOINTE DRIVE
SUITE 200
MINNEAPOLIS, MN 55435
Ph: 1-800-632-2277
Fax: (952) 832-2601
www.barr.com

Scale	AS SHOWN
Date	02/03/2025
Drawn	MRM/AMP3
Checked	MRM/MDB3
Designed	MRM/MDB3
Approved	MRM

RAMSEY-WASHINGTON METRO WATERSHED DISTRICT

ROOSEVELT HOMES PHASE 3
SAINT PAUL, MINNESOTA

DETAILS - CIVIL

BARR PROJECT No.	23621477.03
CLIENT PROJECT No.	
DWG. No.	C-4.4
REV. No.	0

CADD USER: DILLON R. MARTIN FILE: M:\DESIGN\23621477.01\PHASE 2 CAD FILES\23621477_SHEET_C4.X_DETAILS - TRENCH DRAIN.DWG PLOT SCALE: 1:2 PLOT DATE: 2/3/2025 1:58 PM

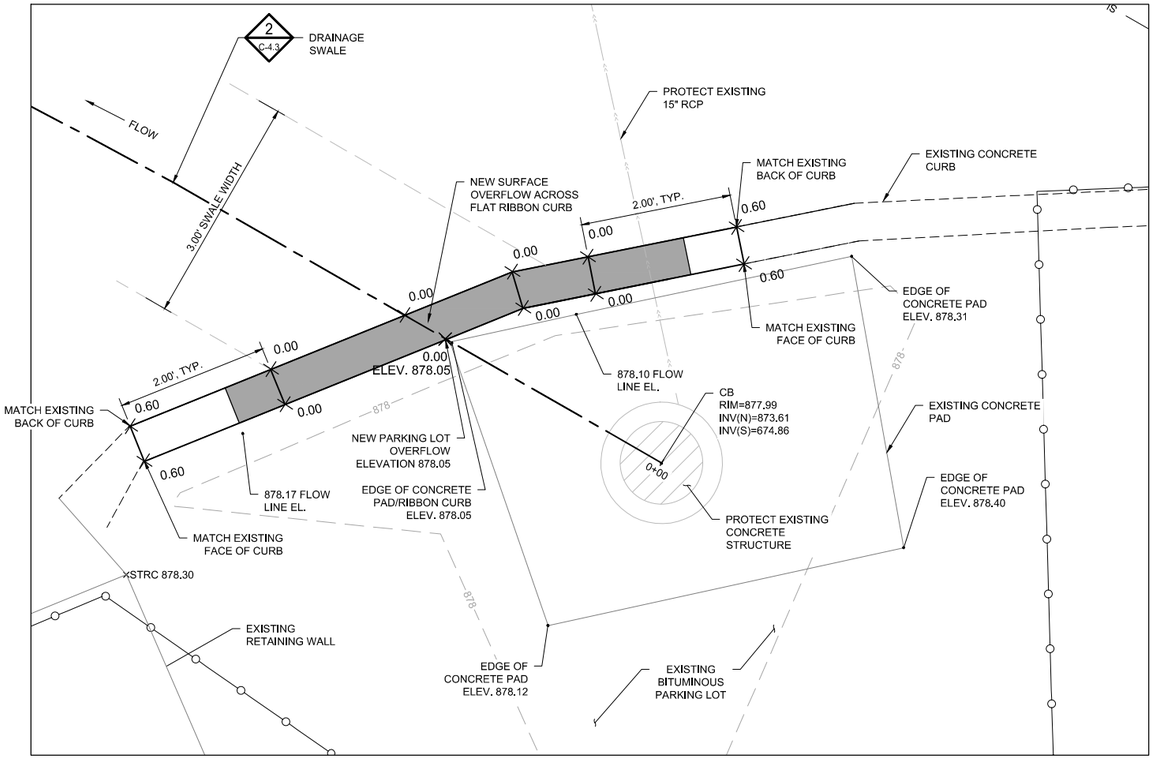

1 - DETAIL: CURB CUT
1"=1'-0"

0 1 2
SCALE IN FEET

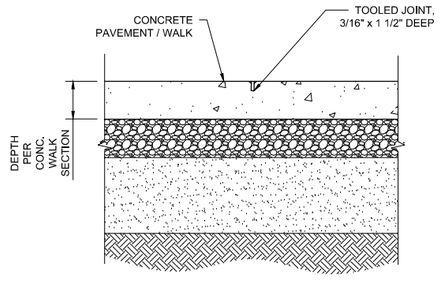

2 - DETAIL: CONCRETE SIDEWALK TOOLED CONTROL JOINT
NOT TO SCALE

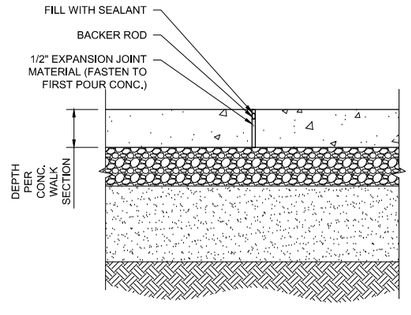

3 - DETAIL: CONCRETE SIDEWALK EXPANSION JOINT
NOT TO SCALE

ISSUE FOR BID
AND PERMITTING

NO.	BY	CHK.	APP.	DATE	REVISION DESCRIPTION

I HEREBY CERTIFY THAT THIS PLAN, SPECIFICATION, OR REPORT WAS PREPARED BY ME OR UNDER MY DIRECT SUPERVISION AND THAT I AM A DULY LICENSED PROFESSIONAL ENGINEER UNDER THE LAWS OF THE STATE OF MINNESOTA.

PRINTED NAME MATTHEW R. METZGER
SIGNATURE
DATE 02/03/2025 LICENSE # 47651

CLIENT							
PERMIT				01/24			
BID				02/25			
CONSTRUCTION							
RECORD							
RELEASED TO/FOR	A	B	C	0	1	2	3
DATE RELEASED							

BARR
Corporate Headquarters:
Minneapolis, Minnesota
Ph: 1-800-632-2277

Project Office:
4300 MARKETPOINTE DRIVE
SUITE 200
MINNEAPOLIS, MN 55435
Ph: 1-800-632-2277
Fax: (952) 832-2601
www.barr.com

Scale	AS SHOWN
Date	02/03/2025
Drawn	MRM/AMP3
Checked	MRM/MDB3
Designed	MRM/MDB3
Approved	MRM

RAMSEY-WASHINGTON METRO WATERSHED DISTRICT

ROOSEVELT HOMES PHASE 3
SAINT PAUL, MINNESOTA

DETAILS - CIVIL

BARR PROJECT No.	23621477.03
CLIENT PROJECT No.	
DWG. No.	C-4.5
REV. No.	0

CADD USER: DILLON R. MARTIN FILE: M:\DESIGN\23621477.01\PHASE 2 CAD FILES\23621477_SHEET_C4.X_DETAILS - TRENCH DRAIN.DWG PLOT SCALE: 1:2 PLOT DATE: 2/3/2025 1:57 PM

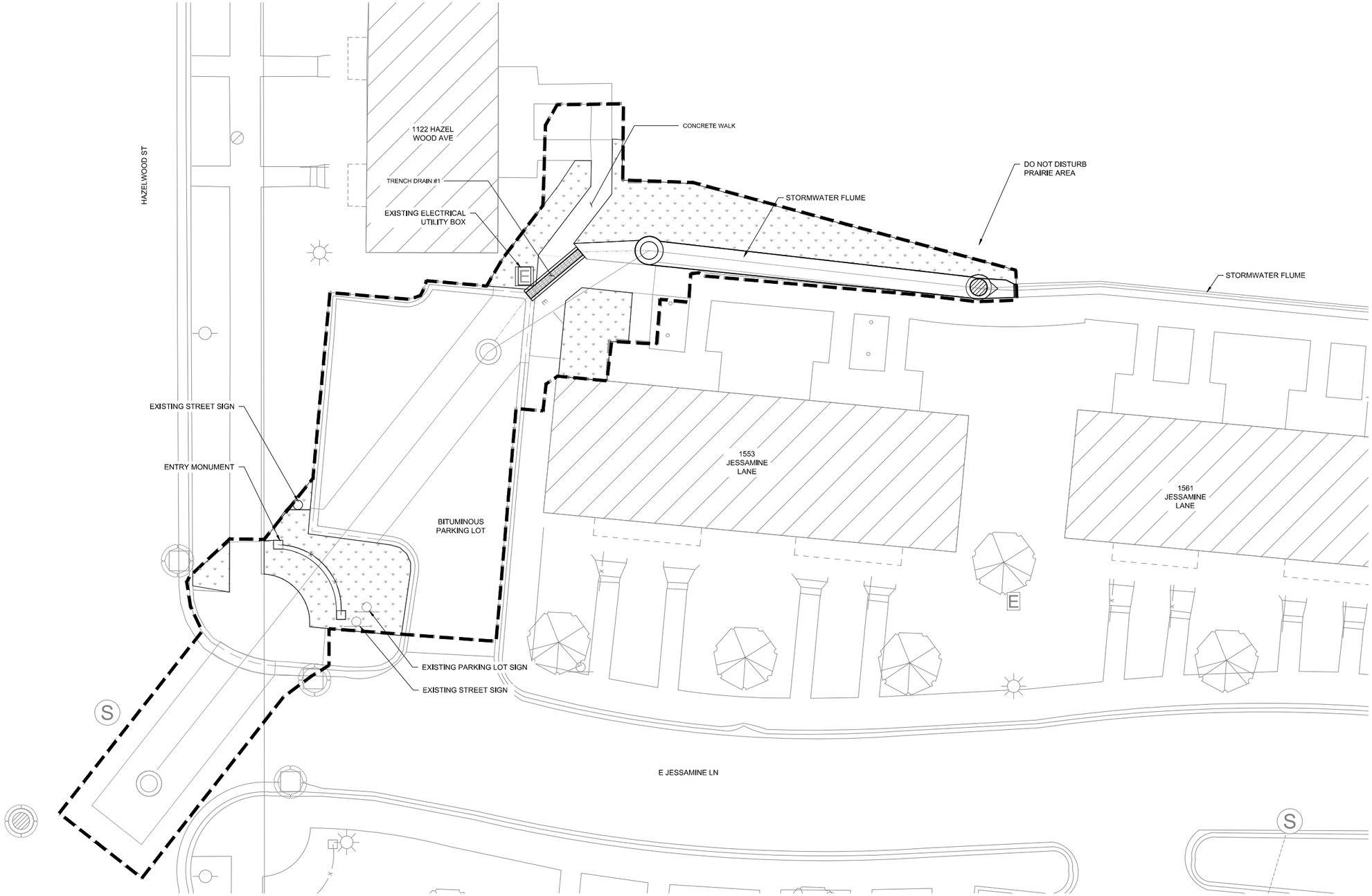

LEGEND

- CONSTRUCTION LIMITS
- (1005) EXISTING MAJOR (5') CONTOUR
- (1004) EXISTING MINOR (1') CONTOUR
- SL SEDIMENT CONTROL LOG
- EXISTING STORM PIPE, TO REMOVE
- EXISTING STORM PIPE, TO REMAIN
- T EXISTING ELECTRIC UTILITY, TO REMAIN
- G EXISTING GAS UTILITY, TO REMAIN
- OU OVERHEAD UTILITY, TO REMAIN
- EASEMENT
- X EXISTING FENCING
- TREE PROTECTION FENCING
- SAW CUT, PAVEMENT TYPE AS NOTED
- EXISTING CURB & GUTTER
- EXISTING OVERHEAD UTILITY POLE
- EXISTING STORMWATER STRUCTURE
- EXISTING STORMWATER STRUCTURE
- EXISTING CATCHBASIN
- S EXISTING SANITARY MANHOLE
- EXISTING LIGHT POLE
- STORMWATER INLET PROTECTION
- EXISTING TREE TO REMAIN
- BEE LAWN SEEDING

NOTES:

1. ALL BEE LAWN AREAS TO RECEIVE MN/DOT CATEGORY 20 2S STRAW EROSION CONTROL BLANKET.
2. ALL EROSION CONTROL BLANKET TO BE LEFT IN PLACE THROUGHOUT PLANT ESTABLISHMENT AND WARRANTY PERIOD.
3. SEE L-2.0 FOR SEEDING AND SITE RESTORATION NOTES
4. CONTRACTOR TO REPAIR ANY SOD IMPACTED DURING CONSTRUCTION TO THE SATISFACTION OF THE OWNER

1 PLAN: NORTH FLUME & STORM PIPE

0 10 20
SCALE IN FEET

ISSUE FOR BID AND PERMITTING

NO.	BY	CHK.	APP.	DATE	REVISION DESCRIPTION

I HEREBY CERTIFY THAT THIS PLAN, SPECIFICATION, OR REPORT WAS PREPARED BY ME OR UNDER MY DIRECT SUPERVISION AND THAT I AM A DULY LICENSED LANDSCAPE ARCHITECT UNDER THE LAWS OF THE STATE OF MINNESOTA.

PRINTED NAME MARCY BEAN
SIGNATURE
DATE 02/03/2025 LICENSE # 48430

CLIENT							
PERMIT				01/24			
BID				02/25			
CONSTRUCTION							
RECORD							
RELEASED TO/FOR	A	B	C	0	1	2	3
	DATE RELEASED						

BARR
Corporate Headquarters:
Minneapolis, Minnesota
Ph: 1-800-632-2277

Project Office:
BARR ENGINEERING CO.
4300 MARKETPOINTE DRIVE
SUITE 200
MINNEAPOLIS, MN 55435
Ph: 1-800-632-2277
Fax: (952) 832-2601
www.barr.com

Scale	AS SHOWN
Date	02/03/2025
Drawn	MRM/AMP2
Checked	MRM/MDB3
Designed	MRM/MDB3
Approved	--

RAMSEY-WASHINGTON METRO WATERSHED DISTRICT

ROOSEVELT HOMES PHASE 3
SAINT PAUL, MINNESOTA

LANDSCAPE PLAN
NORTH FLUME & STORM PIPE

BARR PROJECT No.	23621477.03
CLIENT PROJECT No.	
DWG. No.	L-1.0
REV. No.	0

CADD USER: ANDREW M. PAPKE-LARSON FILE: M:\DESIGN\23621477.01\PHASE 2 CAD FILES\23621477_SHEET_L1-0_LANDSCAPE_NORTH PIPE.DWG PLOT SCALE: 1:2 PLOT DATE: 2/3/2025 2:29 PM

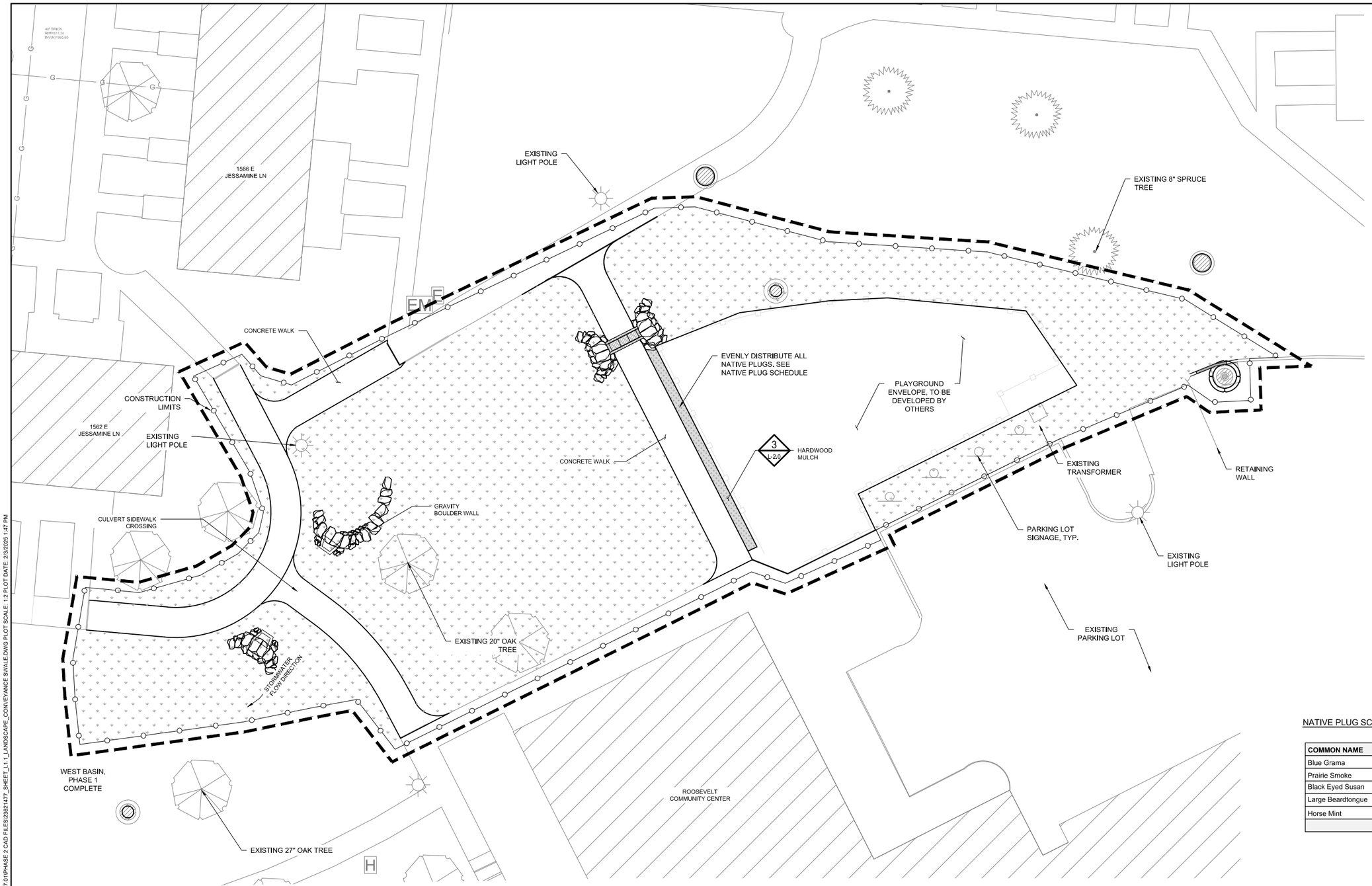

SHEET NOTES:

1. THOROUGHLY WATER ALL PLANTINGS AFTER INSTALLATION.
2. LANDSCAPE ARCHITECT TO BE ON SITE TO APPROVE PLANTING LAYOUT PRIOR TO PLANTING.
3. ALL BEE LAWN AREAS TO RECEIVE MN/DOT CATEGORY 20 2S STRAW EROSION CONTROL BLANKET.
4. ALL EROSION CONTROL BLANKET TO BE LEFT IN PLACE THROUGHOUT PLANT ESTABLISHMENT AND WARRANTY PERIOD.
5. SEE L-2.0 FOR SEEDING AND SITE RESTORATION NOTES
6. CONTRACTOR TO REPAIR ANY SOD IMPACTED DURING CONSTRUCTION TO THE SATISFACTION OF THE OWNER

NATIVE PLUG SCHEDULE:

COMMON NAME	SCIENTIFIC NAME	SIZE	QUANTITY
Blue Grama	*Bouteloua gracilis*	4" PLUG	10
Prairie Smoke	*Geum triflorum*	4" PLUG	8
Black Eyed Susan	*Rudbeckia hirta*	4" PLUG	10
Large Beardtongue	*Penstemon grandiflorus*	4" PLUG	10
Horse Mint	*Monarda punctata*	4" PLUG	8
		TOTAL	46

ISSUE FOR BID AND PERMITTING

CADD USER: DILLON R. MARTIN FILE: M:\DESIGN\23621477.01\PHASE 2 CAD FILES\23621477_SHEET_L1.1_LANDSCAPE_CONVEYANCE SWALE.DWG PLOT SCALE: 1:2 PLOT DATE: 2/3/2025 1:47 PM

NO.	BY	CHK.	APP.	DATE	REVISION DESCRIPTION
-	-	-	-	———	-

I HEREBY CERTIFY THAT THIS PLAN, SPECIFICATION, OR REPORT WAS PREPARED BY ME OR UNDER MY DIRECT SUPERVISION AND THAT I AM A DULY LICENSED LANDSCAPE ARCHITECT UNDER THE LAWS OF THE STATE OF MINNESOTA.

PRINTED NAME Marcy D. Bean

SIGNATURE Marcy D. Bean

DATE 02/03/2025 LICENSE # 48430

	A	B	C	0	1	2	3
CLIENT							
PERMIT				01/24			
BID				02/25			
CONSTRUCTION							
RECORD							

RELEASED TO/FOR — DATE RELEASED

BARR
Corporate Headquarters:
Minneapolis, Minnesota
Ph: 1-800-632-2277

Project Office:
BARR ENGINEERING CO.
4300 MARKETPOINTE DRIVE
SUITE 200
MINNEAPOLIS, MN 55435
Ph: 1-800-632-2277
Fax: (952) 832-2601
www.barr.com

Scale	AS SHOWN
Date	02/03/2025
Drawn	MRM/AMP2
Checked	MRM/MDB3
Designed	MRM/MDB3
Approved	---

RAMSEY-WASHINGTON METRO WATERSHED DISTRICT

ROOSEVELT HOMES PHASE 3
SAINT PAUL, MINNESOTA

LANDSCAPE PLAN
CONVEYANCE SWALE

BARR PROJECT No.	
23621477.03	
CLIENT PROJECT No.	
DWG. No.	REV. No.
L-1.1	0

SLOPE INSTALLATION

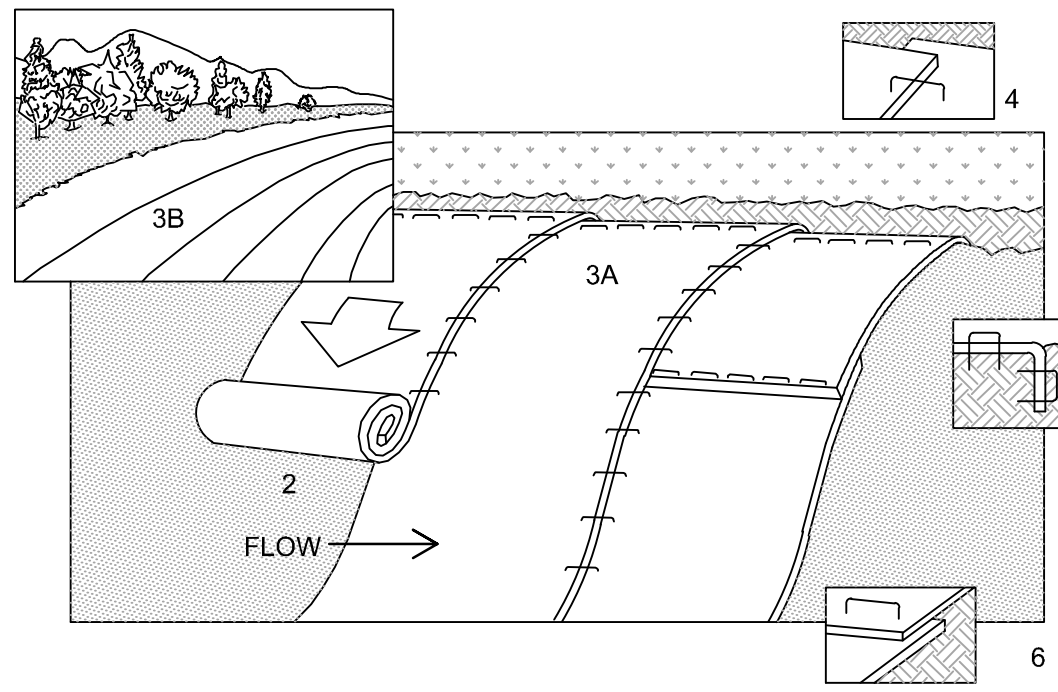

NOTES:

1. REFER TO MANUFACTURER RECOMMENDATIONS FOR STAPLE PATTERNS FOR SLOPE INSTALLATIONS.
2. PREPARE SOIL BY LOOSENING TOP 1-2 INCHES AND APPLY SEED/HYDROSEED/MULCH (AND FERTILIZER WHERE REQUIRED) PRIOR TO INSTALLING BLANKETS. GROUND SHOULD BE SMOOTH AND FREE OF DEBRIS.
3. BEGIN (A) AT THE TOP OF THE SLOPE AND ROLL THE BLANKETS DOWN OR (B) AT ONE END OF THE SLOPE AND ROLL THE BLANKETS HORIZONTALLY ACROSS THE SLOPE.
4. THE EDGES OF PARALLEL BLANKETS MUST BE STAPLED WITH APPROXIMATELY 6" OVERLAP, WITH THE UPHILL BLANKET ON TOP.
5. WHEN BLANKETS MUST BE SPLICED DOWN THE SLOPE, PLACE BLANKETS END OVER END (SHINGLE STYLE) WITH APPROXIMATELY 6" OVERLAP. STAPLE THROUGH OVERLAPPED AREA, APPROXIMATELY 12" APART.
6. BLANKET MATERIALS SHALL BE AS SPECIFIED OR AS APPROVED BY ENGINEER.

1 / - DETAIL: EROSION CONTROL BLANKET INSTALLATION
NOT TO SCALE

NOTES:
1. PREPARE SOIL PER PLAN AND AS SPECIFIED.
2. PROVIDE SEEDING FOR ALL AREAS NOTED ON THE DRAWINGS.
3. PROVIDE SEEDING FOR ALL ADDITIONAL DISTURBED AREAS ON- AND OFF-SITE AS NOTED ON THE DRAWINGS.

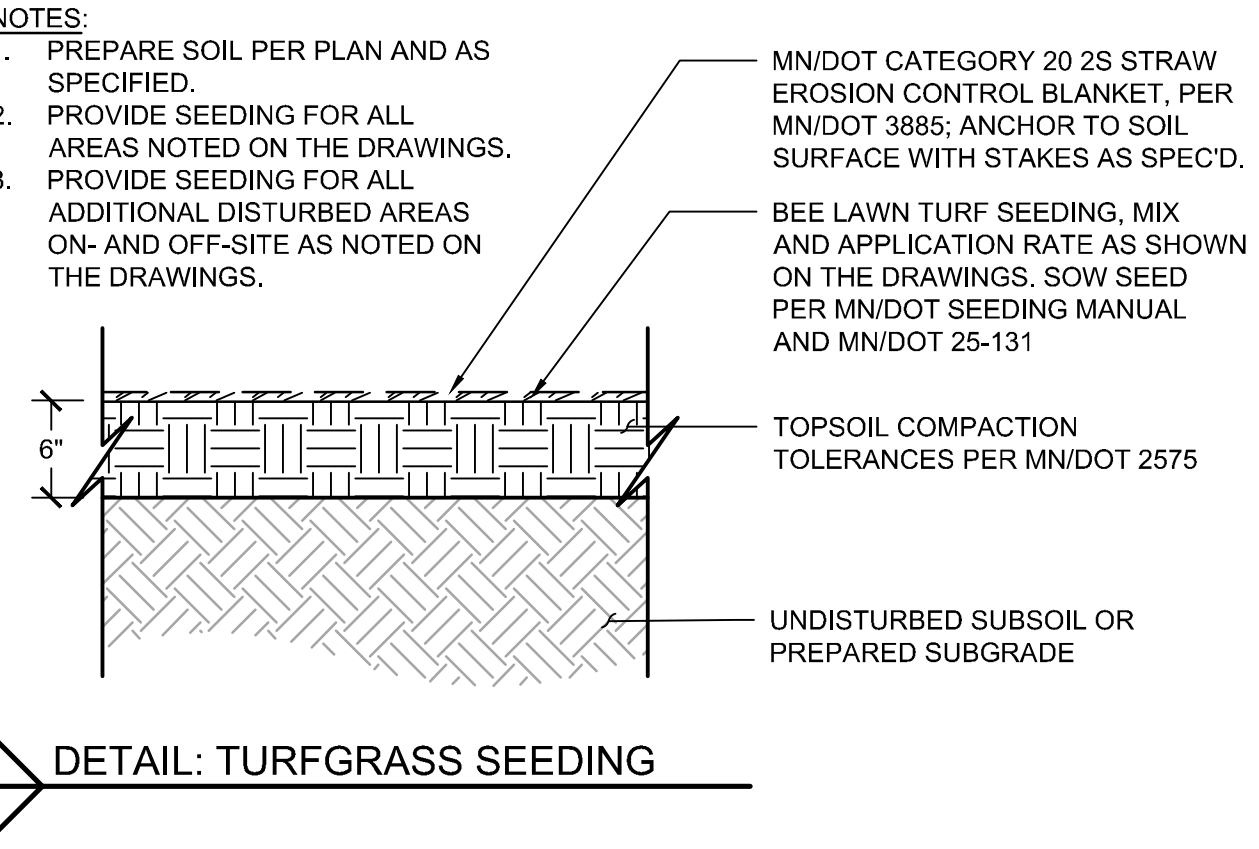

2 / - DETAIL: TURFGRASS SEEDING

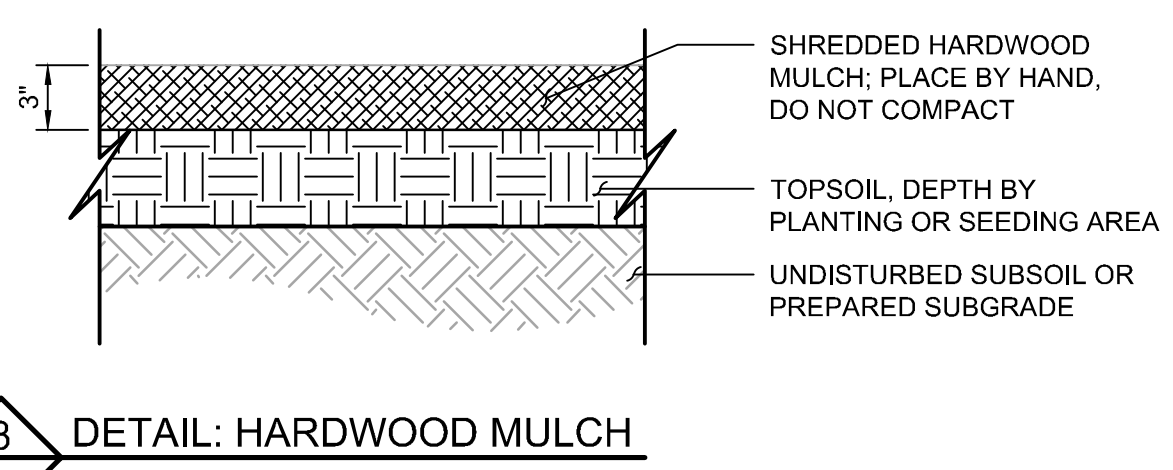

3 / - DETAIL: HARDWOOD MULCH

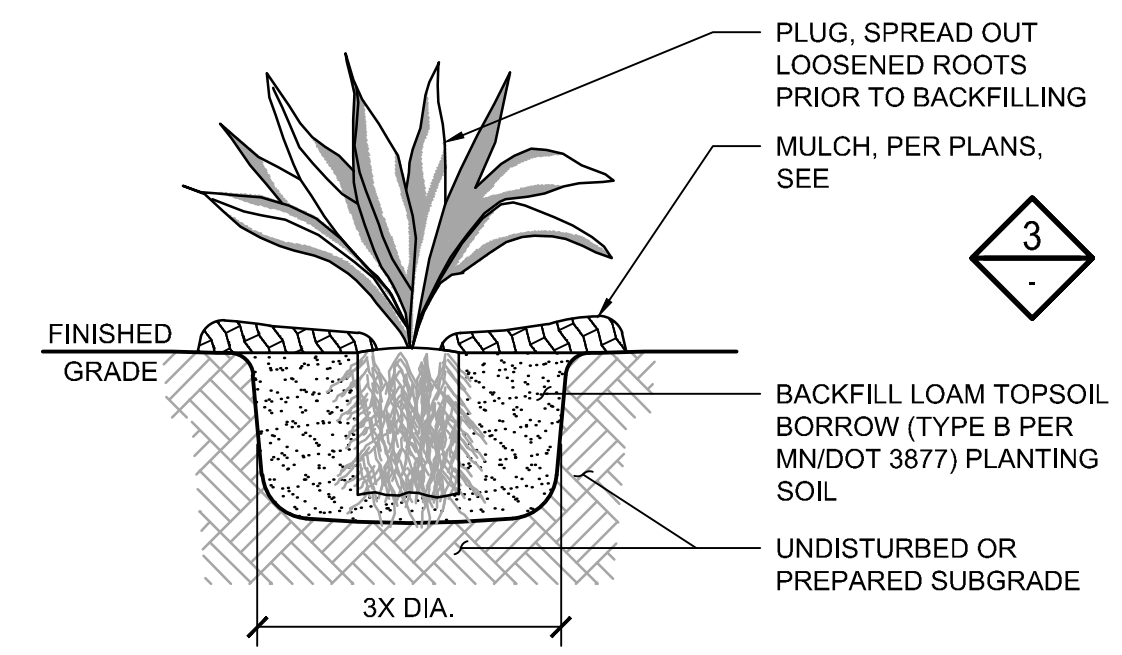

NOTES:
1. PULL BACK MULCH AND CUT AWAY EROSION CONTROL BLANKET. EXCAVATE HOLE 3 TIMES WIDTH OF ROOTBALL, MIN..
2. SCARIFY BOTTOM AND OUTER PERIMETER OF ROOTBALL TO LOOSEN ROOTS. PLANT IN EXCAVATION, ENSURING TOP OF ROOT BALL IS EVEN WITH OR SLIGHTLY ABOVE SOIL FINISHED GRADE.
3. FIRM PLANTING SOIL AROUND ROOTBALL TO ENSURE GOOD SOIL-ROOT CONTACT AND REMOVE ANY AIR POCKETS. DO NOT OVERCOMPACT PLANTING SOIL.
4. WATER THOROUGHLY AFTER PLANTING.
5. SEE PROJECT SPECIFICATIONS FOR ADDITIONAL INSTRUCTIONS AND REQUIREMENTS FOR PLANTING LAYOUT, INSTALLATION, AND REVIEW.

4 / - DETAIL: PLUG PLANTING
NOT TO SCALE

GENERAL LANDSCAPE NOTES:
1. PLANTING SHALL CONFORM TO MNDOT SPEC 2571, PLANT INSTALLATION AND ESTABLISHMENT, EXCEPT AS INDICATED OTHERWISE IN THE PLANTING SHEETS.
2. CONTRACTOR SHALL COORDINATE LAYOUT OF ALL PLANTS WITH DIRECTION OF LANDSCAPE ARCHITECT IN THE FIELD.
3. CONFIRM ALL QUANTITIES, SHAPES AND LOCATIONS OF ALL SEEDING AND PLANTING AREAS; ADJUST QUANTITIES AS REQUIRED TO CONFORM TO THE SITE CONDITIONS. CONFIRM ANY ADJUSTMENTS WITH THE LANDSCAPE ARCHITECT.
4. LOCATE ALL UTILITIES. NOTIFY THE LANDSCAPE ARCHITECT OF ANY CONFLICTS WITH PLANT INSTALLATION.
5. LONG-TERM STORAGE OF MATERIALS OR SUPPLIES ON-SITE WILL NOT BE ALLOWED. ANY PLANT STOCK NOT PLANTED ON DAY OF DELIVERY SHALL BE HEELED IN AND WATERED UNTIL INSTALLATION. PLANTS NOT MAINTAINED IN THIS MANNER WILL BE REJECTED.
6. THE PLAN TAKES PRECEDENCE OVER THE PLANT SCHEDULE IF DISCREPANCIES EXIST. ADVISE LANDSCAPE ARCHITECT OF ANY DISCREPANCIES.
7. PLACE SHREDDED RED HARDWOOD MULCH (MN/DOT SPEC 388.2 TYPE 6 - WEED SEED FREE SHREDDED HARDWOOD) TO A DEPTH OF 3" WITHIN NATIVE PLUG PLANTING AREA.

EXISTING CONDITIONS PROTECTIONS:
1. THE CONTRACTOR SHALL AVOID DAMAGING EXISTING TREES. DO NOT STORE OR DRIVE HEAVY MATERIALS OVER TREE ROOTS. DO NOT DAMAGE TREE BARK OR BRANCHES.
2. THE CONTRACTOR SHALL KEEP PAVEMENTS, FIXTURES AND BUILDINGS CLEAN AND UNSTAINED. ANY DAMAGE TO EXISTING FACILITIES SHALL BE REPAIRED AT THE CONTRACTOR'S EXPENSE. THE PROJECT SITE SHALL BE KEPT CLEAR OF CONSTRUCTION WASTES AND DEBRIS.

SEEDING:
1. ANY EXOTIC INVASIVE PLANTS AND WEEDS WITHIN THE SEEDING AREAS SHALL BE SPRAYED WITH HERBICIDE 14 DAYS PRIOR TO SEEDING OR AS PER MANUFACTURE'S RECOMMENDATION. SIGNAGE INDICATING THE USE OF HERBICIDES MUST BE POSTED ON SITE
2. ALL HERBICIDE APPLICATION SHALL BE APPLIED BY A LICENSED APPLICATOR WITHIN THE STATE OF MINNESOTA.
3. SEEDS SHALL BE BLENDED BY THE VENDOR AND THE MIXTURE AND RATION SHALL BE GUARANTEED IN WRITING TO BE SPECIFIED BY PERCENTAGE OR WEIGHT IN THE SEED AND PLANT LISTS. SEED TESTING INDICATING AN 80% OR HIGHER VIABILITY MUST BE SUPPLIED TO THE ENGINEER OR LANDSCAPE ARCHITECT. THIS IS A SUBMITTAL REQUIRED OF THE CONTRACTOR PRIOR TO PAYOUT.
4. SPECIES AND QUANTITIES TO BE PLANTED SHALL BE THOSE SPECIFIED. SEED MIXTURES AND ANY SUBSTITUTIONS OR CHANGES SHALL BE SUBMITTED IN WRITING TO THE OWNER'S REPRESENTATIVE FOR APPROVAL.
5. SEEDS SHALL BE FREE OF THE PROJECT LOCATION'S STATE IDENTIFIED NOXIOUS WEED SEEDS.
6. SEEDING AREAS SHALL BE FREE FROM INVASION OF WEEDY SPECIES AT TIME OF SEEDING.
7. USE A COMPACTION TESTER TO ENSURE COMPACTION IN THE SEEDING AND PLANTING AREAS DOES NOT EXCEED 200 PSI TO A DEPTH OF AT LEAST 18 INCHES. IF CONTRACTOR-OPERATIONS RESULTS IN ZONES OF HARDPAN OR EXCESSIVELY COMPACTED SOIL, AS CONFIRMED BY ENGINEER OR LANDSCAPE ARCHITECT, REPEAT DEEP CULTIVATION AND FULLY LOOSEN SOIL AS SHOWN ON THE DRAWINGS. THIS WORK SHOULD BE PERFORMED AT NO ADDITIONAL COST TO THE OWNER.
8. SEED IN ACCORDANCE WITH THE SPECIFICATIONS. SEEDING IS TO TAKE PLACE IMMEDIATELY FOLLOWING FINAL GRADING AND SOIL PLACEMENT TO PREVENT EROSION AND COMPACTION.
9. COVER CROP IS TO BE SEEDED WITHIN ALL AREAS.
10. AFTER SEEDING, EROSION CONTROL BLANKET SHALL BE ANCHORED OVER ENTIRE SEEDING AREA IN ACCORDANCE WITH MN/DOT STANDARD SPECIFICATION 3882.
11. REFER TO SPECIFICATIONS FOR ADDITIONAL INFORMATION. IN THE CASE OF ANY DISCREPANCIES BETWEEN THIS DETAIL, PLANS, OR SPECIFICATIONS, THE SPECIFICATIONS SHALL GOVERN.

MAINTENANCE AND CARE:
1. MAINTENANCE SHALL BEGIN IMMEDIATELY AFTER EACH PORTION OF THE WORK IS IN PLACE. PLANT MATERIAL SHALL BE PROTECTED AND MAINTAINED UNTIL THE INSTALLATION OF PLANTINGS IS COMPLETE, INSPECTION HAS BEEN MADE AND PLANTING IS ACCEPTED EXCLUSIVE OF THE GUARANTEE.
2. MAINTENANCE SHALL INCLUDE WATERING, WEEDING, MULCHING, REMOVAL OF DEAD MATERIAL PRIOR TO GROWING SEASON, RE-SETTING PLANTS AND PROPER GRADE, AND KEEPING PLANTS IN A PLUMB POSITION.
3. WATERING IS REQUIRED FOR ALL SEEDING AND PLANTING AREAS, INCLUDING AREAS RESTORED DUE TO CONSTRUCTION ACTIVITIES. CONTRACTOR IS RESPONSIBLE FOR MAINTAINING ADEQUATE, BUT NOT EXCESSIVE, SOIL MOISTURE FOR PLANTS. WATERING MUST RESPOND TO VARYING SEASONAL CONDITIONS, SOIL TYPES, AND DRAINAGE.
4. MAINTAIN A WATERING SCHEDULE WHICH WILL THOROUGHLY WATER ALL PLANTS ONCE A WEEK. IN EXTREMELY HOT, DRY WEATHER, WATER MORE OFTEN AS REQUIRED BY INDICATIONS OF HEAT STRESS SUCH AS WILTING LEAVES. CHECK MOISTURE UNDER MULCH PRIOR TO WATERING TO DETERMINE NEED. CONTRACTOR SHALL MAKE THE NECESSARY ARRANGEMENTS FOR WATER.
5. IF CONTRACTOR DOES NOT PROVIDE RECORDS OF WATERING, LANDSCAPE ARCHITECT WILL REVIEW PLANT HEALTH AND DETERMINE IF PLANT DEATH WAS DUE TO FAILURE TO WATER. ANY REPLACEMENTS MADE AS PART OF CONTRACTOR'S NEGLIGENCE TO WATER WILL BE INSTALLED AT NO ADDITIONAL COST AND WARRANTY OF REPLACED PLANTS WILL RESTART FOLLOWING REVIEW AND APPROVAL BY LANDSCAPE ARCHITECT.
6. SEEDED AREAS SHALL HAVE A MINIMUM 90% COVER OF SELECTED SPECIES BY THE END OF THE 2025 GROWING SEASON. AREAS UNSUCCESSFUL BECAUSE SEED MIX HAS NOT SUCCESSFULLY ESTABLISHED OR BECAUSE PLANTS HAVE BEEN CHOKED OUT BY EXOTIC SPECIES OR DESTROYED BY HERBICIDE DRIFT AT ANY TIME DURING THE VEP SHALL HAVE WEED SPECIES REMOVED PRIOR TO SEED DISPERSAL AND BE RE-SEEDED.
7. ALL PERENNIAL PLANTS PROVIDED BY THE CONTRACTOR SHALL BEGUARANTEED FOR 60 DAYS FROM THE START OF THE DATE OF FORMAL ACCEPTANCE. AT THE END OF THE WARRANTY PERIOD, ALL PLANTS SHALL BE IN A SATISFACTORY CONDITION, EXCLUDING INSTANCES OF VANDALISM, AS DETERMINED BY OWNER.
8. REFER TO SPECIFICATIONS FOR ADDITIONAL INFORMATION. IN THE CASE OF ANY DISCREPANCIES BETWEEN THIS DETAIL, PLANS, OR SPECIFICATIONS, THE SPECIFICATIONS SHALL GOVERN.

SITE RESTORATION NOTES

1. CONTRACTOR IS RESPONSIBLE FOR LOCATING AND FIELD-VERIFYING ALL EXISTING UTILITIES PRIOR TO INITIATING WORK ON THE SITE AND THROUGHOUT THE TERM OF CONSTRUCTION. THE CONTRACTOR IS RESPONSIBLE FOR PROTECTING UTILITIES FROM DAMAGE DURING ALL SITE RESTORATION AND PLANTING OPERATIONS.
2. CONSTRUCTION LIMITS AS SHOWN ARE APPROXIMATE. FINAL CONSTRUCTION LIMITS TO BE COORDINATED WITH THE OWNER AND STAKED IN THE FIELD.
3. CONTRACTOR SHALL TAKE PRECAUTIONS TO MINIMIZE THE TRANSFER OF AQUATIC AND TERRESTRIAL INVASIVE SPECIES TO THE MAXIMUM EXTENT POSSIBLE.
4. ALL EXISTING TREES SHALL BE PROTECTED DURING CONSTRUCTION, UNLESS IDENTIFIED FOR REMOVAL PER PLAN OR AS DIRECTED IN THE FIELD BY THE LANDSCAPE ARCHITECT.
5. ALL EXISTING TREES TO REMAIN, TREE ROOTS, PLANTING BEDS, CONCRETE, ASPHALT, EXISTING CURBS, PAVEMENT, SIDEWALKS, AND OTHER SITE ELEMENTS SHALL BE PROTECTED FROM IMPACTS FROM ALL SOIL PREPARATION AND LANDSCAPING OPERATIONS. AVOID COMPACTING SOIL WITH HEAVY EQUIPMENT. ANY DAMAGE TO EXISTING SITE FEATURES, STRUCTURES, OR NEWLY CONSTRUCTED ITEMS SHALL BE CORRECTED AT THE CONTRACTOR'S EXPENSE AND TO THE OWNER'S SATISFACTION.
6. PROTECT PLANTS ON THE SITE FROM STRESS PRIOR TO INSTALLATION BY PLACING IN SHADE, HEELING INTO MULCH, WATERING, AND USE OF OTHER APPROPRIATE MEASURES.
7. ANY COMPACTION OF PREVIOUSLY LOOSENED SOIL MUST BE RELOOSENED PRIOR TO TOPSOILING OR PLANT INSTALLATION.
8. STAKE OR OTHERWISE LAYOUT ALL INDIVIDUAL/SPECIMEN TREES AND SHRUBS AS SHOWN ON PLAN, DETAILS, AND PLANT SCHEDULE. SOME FIELD ADJUSTMENT MAY BE NECESSARY. LANDSCAPE ARCHITECT TO REVIEW PLANT LAYOUT PRIOR TO PLANTING. INFORM THE LANDSCAPE ARCHITECT OF PLANTING A MINIMUM OF TWO (2) DAYS PRIOR TO PLANT DELIVERY.
9. PLACE MULCH AS SPECIFIED TO DEPTH WITHIN ALL PLANTING AREAS.
10. THOROUGHLY WATER ALL PLANTINGS WITHIN 2 HOURS AFTER INSTALLATION, SEE PROJECT SPECIFICATIONS.
11. CONTRACTOR IS RESPONSIBLE FOR WATERING PLANTS (REGARDLESS OF NOTIFICATION) THROUGHOUT THE ENTIRE WARRANTY PERIOD. WATERING WILL BE CONSIDERED INCIDENTAL TO THE CONTRACT.
12. NOTIFY LANDSCAPE ARCHITECT IMMEDIATELY OF ANY DISCREPANCIES BETWEEN PLANS, SPECIFICATIONS, AND/OR FIELD CONDITIONS ENCOUNTERED.
13. REFER TO WRITTEN SPECIFICATIONS FOR ADDITIONAL INFORMATION. IN THE CASE OF ANY DISCREPANCIES BETWEEN DETAILS, PLANS, AND/OR SPECIFICATIONS, THE SPECIFICATIONS SHALL GOVERN.

BEE LAWN SEED MIX

Common Name	Scientific Name	Rate (lb/ac)	Rate (kg/ha)	% of Mix (by weight)	Seeds/ sq ft
Dutch white clover	*Trifolium repens*	8.70	0.00320	4.46%	154.99
Creeping thyme	*Thymus serpyllum*	2.70	0.00099	1.38%	167.36
Self-heal	*Prunella vulgaris*	9.40	0.00345	4.82%	163.14
	Forbs subtotal	20.80	0.01	10.66%	485.49
Red fescue	*Festuca rubra*	68.41	0.02513	35.07%	712.97
Chewings Fescue	*Festuca rubra ssp. commutata*	47.04	0.01728	24.16%	337.08
Hard fescue	*Festuca trachyphylla*	32.06	0.01178	16.44%	194.92
Sheep Fescue	*Festuca ovina*	26.73	0.00982	13.70%	127.06
	Grasses Subtotal	174.24	0.06	89.37%	1,372.03
	Total	**195.04**	**0.07**	**100%**	**1,857.52**

NATIVE PLANT PLUGS:

COMMON NAME	SCIENTIFIC NAME	SIZE	QUANTITY
Blue Grama	*Bouteloua gracilis*	4" PLUG	10
Prairie Smoke	*Geum triflorum*	4" PLUG	8
Black Eyed Susan	*Rudbeckia hirta*	4" PLUG	10
Large Beardtongue	*Penstemon grandiflorus*	4" PLUG	10
Horse Mint	*Monarda punctata*	4" PLUG	8
		TOTAL	46

NOTES:

1. THOROUGHLY WATER ALL PLANTINGS AFTER INSTALLATION.
2. LANDSCAPE ARCHITECT TO BE ON SITE TO APPROVE PLANTING LAYOUT PRIOR TO PLANTING.

TYPICAL PLUG SPACING

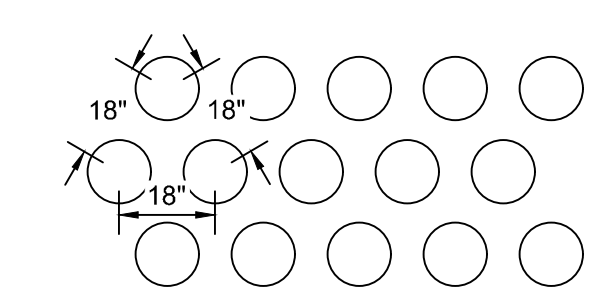

ISSUE FOR BID AND PERMITTING

CADD USER: Dillon R. Martin FILE: M:\DESIGN\23621477.01\PHASE 2 CAD FILES\23621477_SHEET_L2.0_LANDSCAPE_DETAILS.DWG PLOT SCALE: 1:2 PLOT DATE: 2/3/2025 1:45 PM
Xrefs in Drawing - M:\Design\23621172.03\2362117203_MAPLEWOOD CITY HALL_DESIGNBASEv2.dwg M:\Design\23621172.03\2362003116_BASE_C3D_SURVEY_INITIAL_MAPLEWOOD_CITY_HALL.dwg
Images in Drawing - M:\Design\23621172.04\MEK2.jpg M:\Design\23621172.04\MEK2.jpg
mek2 M:\Design\23621172.03\2362117203_Maplewood City Hall_C-01.dwg Plot at 0 10/18/2017 11:24:10

NO.	BY	CHK.	APP.	DATE	REVISION DESCRIPTION

I HEREBY CERTIFY THAT THIS PLAN, SPECIFICATION, OR REPORT WAS PREPARED BY ME OR UNDER MY DIRECT SUPERVISION AND THAT I AM A DULY LICENSED LANDSCAPE ARCHITECT UNDER THE LAWS OF THE STATE OF MINNESOTA.

PRINTED NAME MARCY BEAN
SIGNATURE [signature]
DATE 02/03/2025 LICENSE # 48430

RELEASED TO/FOR	A	B	C	0	1	2	3
CLIENT	——	——	——	——	——	——	——
PERMIT	——	——	——	01/24	——	——	——
BID	——	——	——	02/25	——	——	——
CONSTRUCTION	——	——	——	——	——	——	——
RECORD	——	——	——	——	——	——	——
	DATE RELEASED						

BARR
Corporate Headquarters: Minneapolis, Minnesota
Ph: 1-800-632-2277

Project Office:
BARR ENGINEERING CO.
4300 MARKETPOINTE DRIVE
SUITE 200
MINNEAPOLIS, MN 55435
Ph: 1-800-632-2277
Fax: (952) 832-2601
www.barr.com

Scale	AS SHOWN
Date	02/03/2025
Drawn	DJS2/AMP3
Checked	MDB3
Designed	BARR
Approved	MDB3

RAMSEY-WASHINGTON METRO WATERSHED DISTRICT

ROOSEVELT HOMES PHASE 3
SAINT PAUL, MINNESOTA

LANDSCAPE DETAILS
LANDSCAPE DETAILS

BARR PROJECT No. 23621477.03
CLIENT PROJECT No.
DWG. No. L-2.0
REV. No. 0

Request for Board Action

Board Meeting Date: March 5, 2025 **Agenda Item No:** 7C

Preparer: Tina Carstens, Administrator

Item Description: 2025 Targeted Retrofit Projects Accept Plans & Solicit Bids – Maplewood Toyota and Cochran Recovery Services

Background:
See the attached memo for more information on the two Targeted Retrofit projects for 2025, Maplewood Toyota and Cochran Recovery Services.

The engineer's opinion of the probable construction cost for the Maplewood Toyota project is $26,000, and for Cochran Recovery Services, it is $152,000. These projects were planned through our Targeted Retrofit program and will be funded with that fund. Because these projects are different in scope and required expertise they will be bid separately.

They will go out for bid in March through communication with select bidders with the goal of a minimum of three bids for each project. The select contractors may have done similar work and/or have previously constructed projects for the district. This process is being done because they are below the formal public bidding requirement of $175,000. The selection of contractors will come back to the board at the April meeting.

Applicable District Goal and Action Item:

Goal: Achieve quality surface water – The District will maintain or improve surface water quality to support healthy ecosystems and provide the public with a wide range of water-based benefits.

Action Item: Implement retrofit water quality improvement projects.

Staff Recommendation:
Staff recommends approval of the preliminary design, estimated costs, and proposed project schedule, and direct staff to finalize the design and bidding documents and solicit bid proposals.

Financial Implications:
This project will be funded through our Targeted Retrofit Fund.

Board Action Requested:
Approve the preliminary design, estimated costs, and proposed project schedule, and direct staff to finalize the design and bidding documents and solicit bid proposals.

Memorandum

To: RWMWD Board of Managers
From: Marcy Bean, Josh Phillips, Owen Richey, Elli Zajkowski
Subject: 2025 Targeted Retrofit Projects- Request for Bidding Authorization
Date: February 27, 2025
c: Paige Ahlborg and Tina Carstens

Summary

The purpose of RWMWD's Targeted Retrofit program is to design, provide bid assistance for, and oversee the construction of BMP retrofits on previously identified commercial, school, and faith-based properties throughout the District. The locations of the 2025 Targeted Retrofit Projects proposed for construction are shown in Figures 1 and 2 below.



Figure 1: The Cochran Recovery Services project emphasizes creation of raingardens where water is already collecting, improving drainage, and converting turf to native plantings.

Cochran Recovery Services (Maplewood): This is a 7.8-acre site with moderate impervious surfaces. Expanding on concepts developed by Ramsey Conservation District, Barr proposed several stormwater basins, turf conversion, native seeding, and plantings to retrofit a significant portion of existing turf and garden beds. By maximizing turf and garden bed conversion to native basins, prairie, and formal plantings, we can improve drainage lower erosion in turf areas and promote biodiversity.

Maplewood Toyota (Maplewood): This project involves the construction of a concrete sediment forebay to collect stormwater runoff from the parking lot at the Toyota dealership. The forebay is designed to trap and accumulate sediment for removal, preventing it from flowing into the adjacent wetland. The design was developed to make it simple and straightforward for the property owner to remove and dispose of sediment and associated pollutants. Native shrubs and perennials will be planted surrounding the structure, enhancing the natural beauty and ecological health of the area. This BMP was selected to move forward by the property owner due to its limited impact on the day-to-day function of the business.

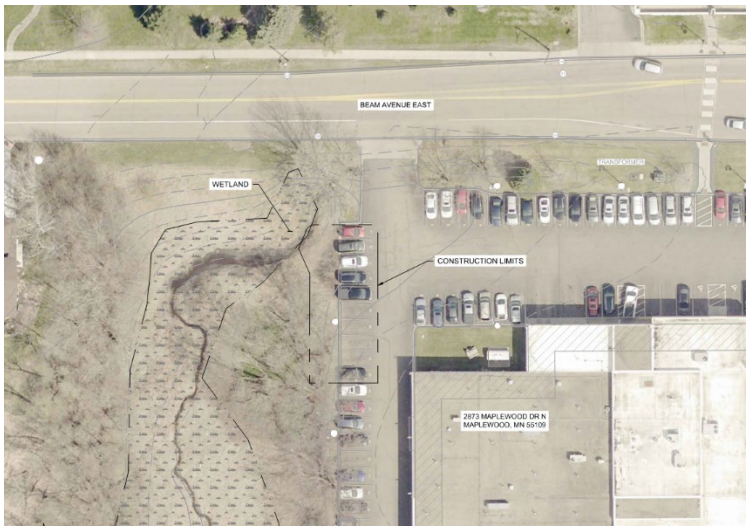

Figure 2: Maplewood Toyota's BMP is a pretreatment structure to reduce pollutants being deposited directly into the wetland that flows into Kohlmann Lake.

Engineer's Opinion of Cost and Water Quality Treatment Estimate

A summary of the updated (90%) engineer's opinion of probable cost and water quality treatment estimate is included in the table below.

Table 1: Summary of 90% opinion of probable costs and water quality treatment estimate

Proposed concept	Engineer opinion of cost for construction	Engineer opinion of cost range (-5% to +10%)	BMP average annual TP removal (lb/year)	Annualized cost per pound of TP removal
Cochran Recovery Services (tree trench and rain garden)	$ 152,000	$144,400 to $167,200	0.91	$12,100
Maplewood Toyota (pretreatment)	$26,000	$24,700 to $28,600	0.7	$4,300

The current engineer's opinion of probable cost for the project ranges from -5% to +10%. These opinions of cost include a 10% contingency and reflect a 90% design level of accuracy. The opinion of cost is intended to provide assistance in evaluating and comparing the project bids and should not be assumed as an absolute rule. The Association for the Advancement of Cost Engineering (AACE) Class 1 opinion of cost was used to define the estimated accuracy range based on the level of project definition.

To put these annualized cost per pound of TP removal amounts in perspective, we remind you of the "RWMWD Project Cost-Benefit Database" memo to the RWMWD Board of Managers, dated October 29, 2024. In this memo, we explain that through 2023, RWMWD has invested in a range of Targeted Retrofit and Capital Improvements Projects that fall along the following cost distribution (described below and in Figure 3, below)

- 60% of projects are less than **$6,300/lb TP removed/yr** (2023 dollars)
- 80% of projects are less than **$10,600/lb TP removed/yr** (2023 dollars)

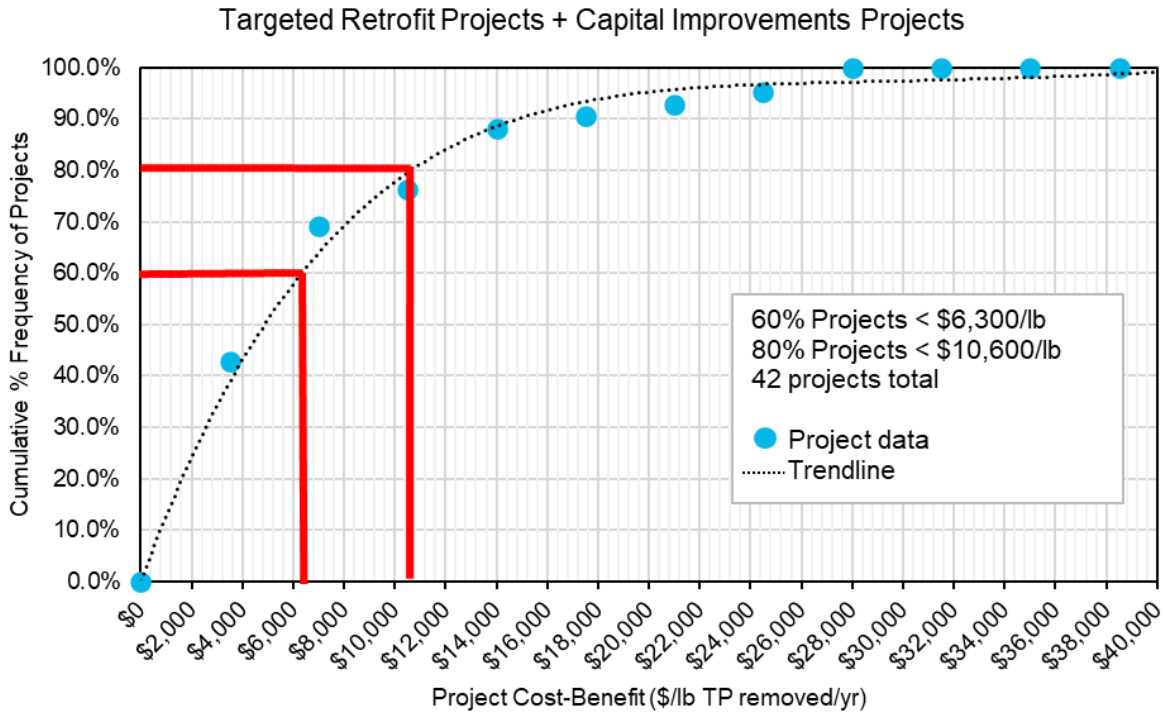

Figure 3: Targeted Retrofit Projects + Capital Improvements Projects Cost-Benefit Cumulative Frequency Curve

RWMWD Prioritization Tool

Both of the 2025 retrofit projects have been scored within RWMWD's water quality project prioritization tool. Cochran Recovery Services ranks near the top of the list, just behind a stormwater reuse system that does not yet have landowner approval.

Table 2: Summary of RWMWD Prioritization Tool Scores for the 2025 Retrofit Projects

Plan Goal Categories	Scores per Plan Goal Category	
	Cochran Recovery Services	Maplewood Toyota
1. Water Quality	0.5	2.0
2. Ecosystem	5.5	1.0
3. Flooding	0.0	0.0
4. Groundwater	2.0	0.0
5. Community	6.0	2.0
6. Manage Organization	4.5	2.5

A description of the credits that each project received in the tool under each of RWMWD's Plan Goal categories is included below.

Cochran Recovery Services Prioritization Tool Credits:

RWMWD Goal 1. Achieve quality surface water

- TP removals (lb/yr) (0.91 lbs)
- TSS removals (lb/yr) (296 lbs)

RWMWD Goal 2. Achieve healthy ecosystems

- Project provides habitat connection opportunities
- Enhances habitat and species diversity
- Reduces pesticide and fertilizer impacts

RWMWD Goal 4. Support sustainable groundwater

- Project promotes infiltration

RWMWD Goal 5. Inform and empower communities

- District priority equity area
- Has a planned educational component to increase awareness of the District's efforts
- Project improves community attractiveness or value
- Project fosters collaboration with cities, watershed management organizations, educational institutions, and other stakeholders to develop and implement shared communication and messaging strategies

RWMWD Goal 6. Manage organization effectively

- Extends the useful life the existing infrastructure
- Easy to construct/implement (i.e., logistically easy, shovel-ready project)
- Partner will provide operations and maintenance
- Willing project partners

Maplewood Toyota Prioritization Tool Credits:

RWMWD Goal 1. Achieve quality surface water

- $/lb TP removed lower than $10,300/lb/year
- TP removals (lbs/yr) (0.7 lbs)
- TSS removals (lb/yr) (7 lbs)

RWMWD Goal 2. Achieve healthy ecosystems

- Protects wetlands

RWMWD Goal 5. Inform and empower communities

- Project improves community attractiveness or value
- Project fosters collaboration with cities, watershed management organizations, educational institutions, and other stakeholders to develop and implement shared communication and messaging strategies

RWMWD Goal 6. Manage organization effectively

- Easy to construct/implement (i.e., logistically easy, shovel-ready project)
- Partner will provide operations and maintenance
- Willing project partners

Specifications Outline

In addition to the drawings attached, bid documents are being completed that include the following specifications:

Front-End Specifications:

Advertisement for Bid

Instruction to Bidders

Form of Agreement

General Conditions

Supplementary Conditions

General Requirements:

Summary of Work

Measurement and Payment

Payment Procedures

Safety

Closeout Procedures

Technical Specifications:

Special Bidding Considerations

Given the high vehicular and pedestrian traffic potential during construction for both projects, we plan to ask bidders to provide three examples of prior work on similar types of parking lot projects, along with references, to be deemed eligible to submit a bid.

Schedule

Pending Board approval to put these projects out to bid after the March Board meeting, we anticipate bringing bids back in April. Construction at both sites is likely to start in June 2025.

Attachments

90% Draft Plansets for RWMWD's 2025 BMP Retrofit Projects at Cochran Recovery Services and Maplewood Toyota.

COCHRAN RECOVERY SERVICES RETROFIT

RAMSEY-WASHINGTON METRO WATERSHED DISTRICT

MAPLEWOOD, MN

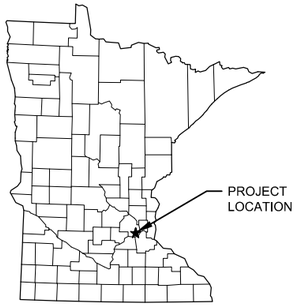

LOCATION MAP
NOT TO SCALE



VICINITY MAP
NOT TO SCALE

SHEET INDEX

SHEET	TITLE
G-01	PROJECT LOCATION AND SHEET INDEX
G-02	TOPOGRAPHIC SURVEY
C-01	REMOVALS AND EROSION CONTROL PLAN
C-02	GRADING PLAN
C-03	EROSION CONTROL DETAILS
C-04	SECTION DETAILS
C-05	CIVIL DETAILS
L-01	SEEDING PLAN
L-02	PLANTING PLAN
L-03	LANDSCAPE DETAILS

REFERENCING

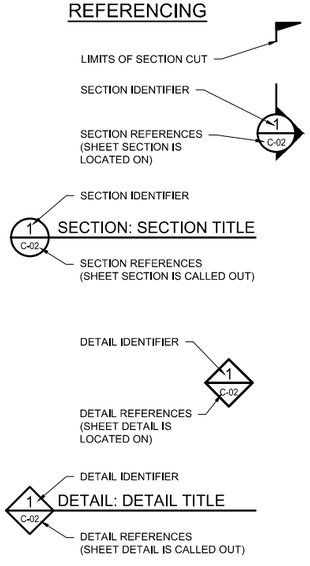

ABBREVIATIONS AND SYMBOLS

APPROX	APPROXIMATE
ASCE	AMERICAN SOCIETY OF CIVIL ENGINEERS
ASTM	AMERICAN SOCIETY FOR TESTING AND MATERIALS
CONC	CONCRETE
DIP	DUCTILE IRON PIPE
EL	ELEVATION
F.F.E.	FINISHED FLOOR ELEVATION
HARN	HIGH ACCURACY REFERENCE NETOWRK
ID	INSIDE DIAMETER
IE	INVERT ELEVATION
MAX	MAXIMUM
MIN	MINIMUM
NAVD	NATIONAL AMERICAN VERTICAL DATUM
NGVD	NATIONAL GEODETIC VERTICAL DATUM
NO.	NUMBER
OC	ON CENTER
PVC	POLYVINYL CHLORIDE
ROW	RIGHT-OF-WAY
TBD	TO BE DETERMINED
TYP	TYPICAL
@	AT
Ø	DIAMETER

NOTES:

1. COMPLY WITH ALL APPLICABLE LOCAL, STATE, AND FEDERAL CODES, PERMITS, AND REGULATIONS.
2. VERIFY ALL QUANTITIES, GRADES, AND DIMENSIONS.
3. FIELD-LOCATE ALL SITE UTILITIES (PRIVATE AND PUBLIC) PRIOR TO STARTING THE WORK. ALL UTILITIES SHOWN ON THE PLANS ARE APPROXIMATE. ANY UTILITIES DAMAGED BY CONTRACTOR SHALL BE REPAIRED TO THE SATISFACTION OF UTILITY OWNER AT CONTRACTOR'S COST.

PROJECT DATUM:
HORIZONTAL: STATE PLANE (NAD83), NORTH, US FT
VERTICAL: NAVD 88

811 Know what's **below.** **Call 811** before you dig.

90% DRAWINGS
NOT FOR CONSTRUCTION

I HEREBY CERTIFY THAT THIS PLAN, SPECIFICATION, OR REPORT WAS PREPARED BY ME OR UNDER MY DIRECT SUPERVISION AND THAT I AM A DULY LICENSED LANDSCAPE ARCHITECT UNDER THE LAWS OF THE STATE OF MINNESOTA.

PRINTED NAME _____

SIGNATURE _____

DATE _____ LICENSE # _____

#	BY	CHK	APP	DATE	RELEASE/REVISION DESCRIPTION

BARR ENGINEERING CO.
4300 MARKETPOINTE DRIVE
SUITE 200
MINNEAPOLIS, MN 55435
PH: 1-800-632-2277
WWW.BARR.COM

RWMWD
Ramsey-Washington Metro Watershed District

COCHRAN RECOVERY SERVICES RETROFIT

PROJECT LOCATION AND SHEET INDEX

BARR PROJECT # 23621172.00
DWG # G-01
REV # -

CADD USER: ELLI G. ZAJKOWSKI FILE: M:\DESIGN\23621172.00_2025 RETROFIT SITES_COCHRAN RECOVERY SERVICES\23621172_COCHRAN_G-01_COVER SHEET.DWG PLOT SCALE: 1:2 PLOT DATE: 2/25/2025 9:42 AM

TOPOGRAPHICAL SURVEY FOR:
BARR ENGINEERING



LEGEND

- Fence
- OE — Overhead Electric
- ST — Storm Sewer
- Retaining Wall
- AC — Air Conditioning Unit
- Storm Catch Basin
- Storm Catch Basin
- Sanitary Cleanout
- Electric Handhole
- Light Pole
- Power Pole
- Hydrant
- Traffic Sign
- Flag Pole
- 900.0 — Existing Elevation
- 900.0TC — Top of Curb Elevation
- 900.0G — Gutter Elevation
- 900.0TW — Top of Wall Elevation
- 900.0BW — Bottom of Wall Elevation
- 900 — Existing Contour
- Found Iron Monument

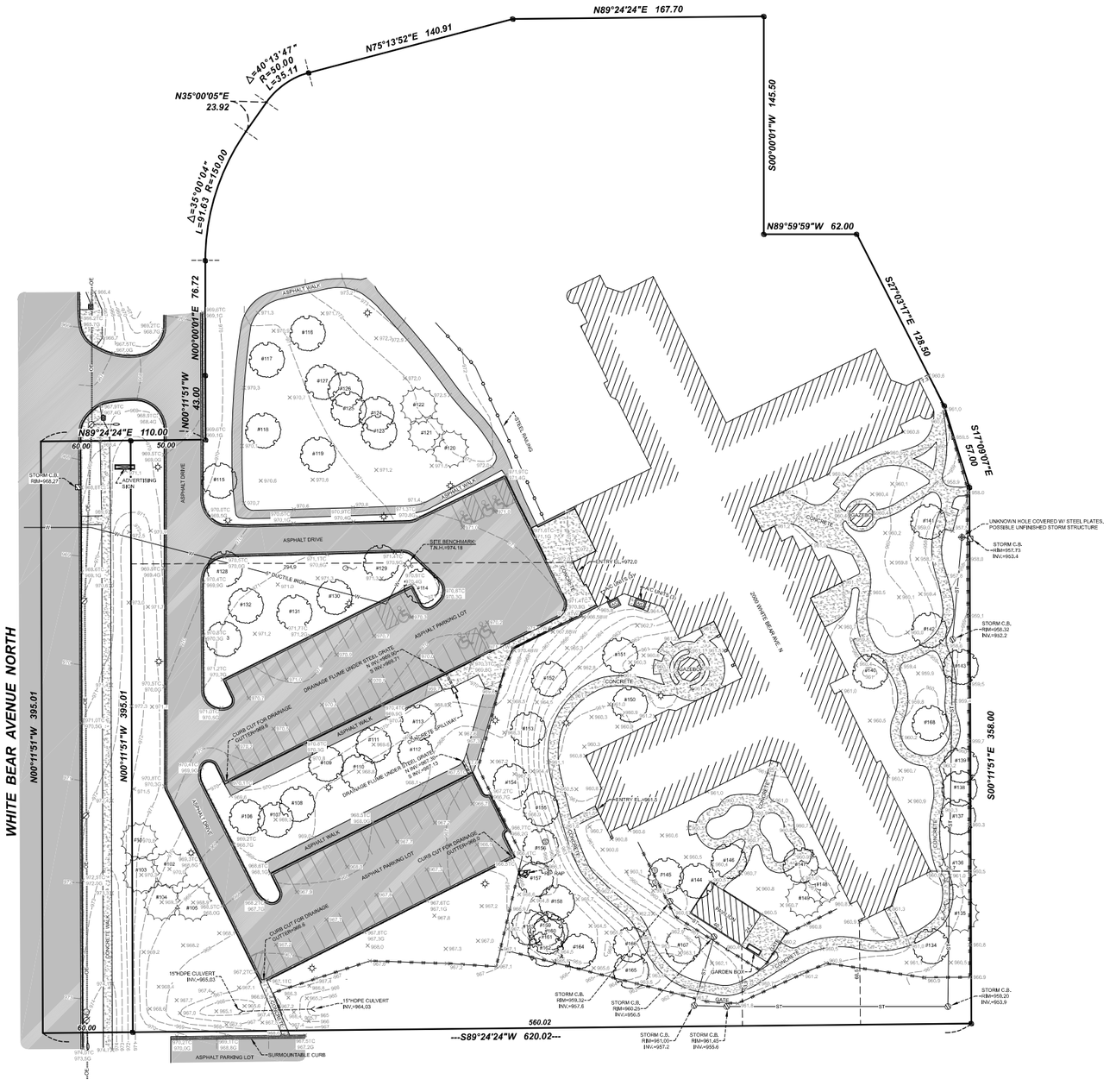

TREE INVENTORY		
TREE NO.	SPECIES	D.B.H.
#101	SPRUCE	16"
#102	SPRUCE	22"
#103	SPRUCE	14"
#104	SPRUCE	14"
#105	SPRUCE	14"
#106	DECIDUOUS	16"
#107	DECIDUOUS	16"
#108	DECIDUOUS	16"
#109	DECIDUOUS	12"
#110	DECIDUOUS	12"
#111	DECIDUOUS	12"
#112	DECIDUOUS	18"
#113	DECIDUOUS	18"
#114	DECIDUOUS	16"
#115	DECIDUOUS	18"
#116	DECIDUOUS	10"
#117	DECIDUOUS	10"
#118	DECIDUOUS	16"
#119	DECIDUOUS	12"
#120	SPRUCE	18"
#121	SPRUCE	14"
#122	SPRUCE	18"
#123	DECIDUOUS	6"
#124	DECIDUOUS	12"
#125	DECIDUOUS	12"
#126	DECIDUOUS	12"
#127	DECIDUOUS	12"
#128	DECIDUOUS	12"
#129	DECIDUOUS	15"
#130	DECIDUOUS	12"
#131	DECIDUOUS	14"
#132	DECIDUOUS	12"
#133	DECIDUOUS	15"
#134	MAPLE	12"
#135	SPRUCE	10"
#136	SPRUCE	10"
#137	MAPLE	8"
#138	MAPLE	6"
#139	MAPLE	6"
#140	DECIDUOUS	12"
#141	MAPLE	12"
#142	MAPLE	10"
#143	MAPLE	6"
#144	HACKBERRY	15"
#145	HACKBERRY	16"
#146	OAK	6"
#148	SPRUCE	8"
#149	SPRUCE	6"
#150	MAPLE	15"
#151	MAPLE	15"
#152	OAK	8"
#153	OAK	6"
#155	MAPLE	6"
#157	ASPEN	10"
#158	ASPEN	15"
#159	ASPEN	12"
#160	ASPEN	10"
#161	ASPEN	10"
#162	ELM	8"
#163	ELM	8"
#164	ASPEN	18"
#165	OAK	12"
#166	OAK	6"
#167	HACKBERRY	18"
#168	MAPLE	10"
#147	APPLE	12"
#154	APPLE	6"
#156	APPLE	8"

D.B.H. = Diameter at Breast Height

PROPERTY DESCRIPTION:

Real property in the City of Maplewood, County of Ramsey, State of Minnesota, described as follows:

That part of the West 620 feet of the North 438 feet of the North half of the Southwest Quarter and of the West 620 feet of the South 235.8 feet of the Northwest Quarter all in Section 14, Township 29, Range 22, Ramsey County, Minnesota, according to the government survey thereof, described as follows: Commencing at the Northwest corner of said Southwest Quarter of Section 14, Township 29, Range 22; thence South 0 degrees 11 minutes 56 seconds East, assumed bearing, along the West line of said Southwest Quarter, a distance of 43.00 feet to the point of beginning of the property to be described; thence continuing South 0 degrees 11 minutes 56 seconds East, along said west line, a distance of 395,01 feet to the point of intersection with the south line of the North 438 feet of said North half of the Southwest Quarter; thence North 89 degrees 24 minutes 19 seconds East, along said South line of the North 438 feet, a distance of 620.02 feet to the point of intersection with the east line of the West 620 feet of said North half of the Southwest Quarter; thence North 0 degrees 11 minutes 56 seconds West, along said east line of the West 620 feet, a distance of 358,00 feet; thence North 17 degrees 09 minutes 12 seconds West a distance of 57,00 feet; thence North 27 degrees 03 minutes 22 seconds West a distance of 128.50 feet; thence South 89 degrees 59 minutes 56 seconds West a distance of 62,00 feet; thence North 0 degrees 0 minutes 04 seconds West, parallel with the West line of said Northwest Quarter, a distance of 145,50 feet to the point of intersection with the North line of said South 235,8 feet of the Northwest Quarter; thence South 89 degrees 24 minutes 19 seconds West, along said North line of the South 235.8 feet, a distance of 167.70 feet; thence South 75 degrees 13 minutes 47 seconds West, a distance of 140.91 feet; thence southwesterly a distance of 35,11 feet along a tangential curve concave to the Southeast, having a radius of 50.00 feet and a central angle of 40 degrees 13 minutes 47 seconds; thence South 35 degrees 0 minutes 0 seconds West, tangent to the last described curve, a distance of 23.92 feet; thence southwesterly and southerly a distance of 91.63 feet along a tangential curve concave to the Southeast, having a radius of 150.00 feet and a central angle of 35 degrees 0 minutes 04 seconds; thence South 0 degrees 0 minutes 04 seconds East, tangent to the last described curve and parallel with the west line of said Northwest Quarter, a distance of 76.72 feet to the South line of said Northwest Quarter; thence South 0 degrees 11 minutes 56 seconds East, parallel with the West line of said Southwest Quarter, a distance of 43.00 feet; thence South 89 degrees 24 minutes 19 seconds West, parallel with the North line of said Southwest Quarter, a distance of 110.00 feet to said point of beginning and there terminating.

GENERAL NOTES:

· Existing building dimensions are measured to siding and not building foundation.

· No title commitment was provided and no research was performed for any easements not shown on this survey.

· Location of utilities shown are from observed evidence in the field and/or plans furnished by others and are considered approximate. Gopher State One Call or a private utility locator should be contacted to locate utilities on site before excavation.

JOB NO. 404-24	SCALE 1" = 40'	SITE ADDRESS 2000 White Bear Ave. N Maplewood, MN 55109	REVISIONS	
BOOK/PAGE	DRAWN CME		DATE	REMARKS
SHEET 1 of 1 24x36	REFERENCE	SITE BENCHMARK T.N.H. in the curb island near the front entrance of main structure. Elevation = 974.18.		

I hereby certify that this survey, plan, or report was prepared by me or under my direct supervision and that I am a duly registered Land Surveyor under the laws of the State of Minnesota.

W. BROWN LAND SURVEYING, INC.

DATED: 10-22-2024

WOODROW A. BROWN, R.L.S. MN REG 15230

W. BROWN LAND SURVEYING, INC.
8030 OLD CEDAR AVENUE SO., SUITE 228
BLOOMINGTON, MN 55425
PH: (952) 854-4055
WBROWNLANDSURVEYING.COM
EMAIL: INFO@WBROWNLANDSURVEYING.COM

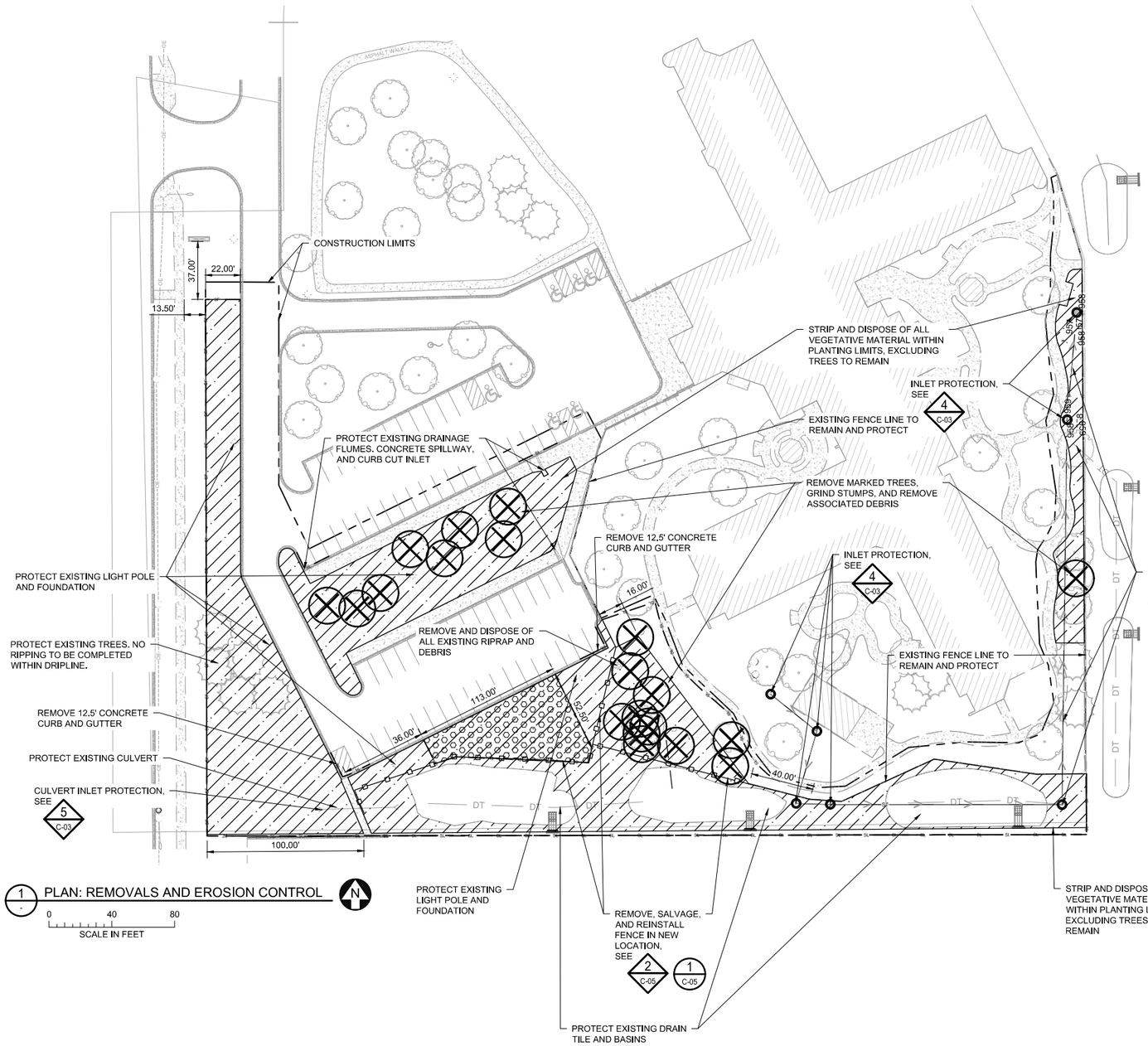

1 - PLAN: REMOVALS AND EROSION CONTROL

0 40 80

SCALE IN FEET

LEGEND - EXISTING - SITE

- 1380 EXISTING MAJOR CONTOUR
- 1379 EXISTING MINOR CONTOUR
- EXISTING FENCE
- EXISTING CURB AND GUTTER
- EXISTING CONCRETE
- EXISTING RIPRAP
- EXISTING CULVERT
- EXISTING LIGHT POLE
- EXISTING DECIDUOUS TREE
- EXISTING CONIFEROUS TREE
- DT EXISTING DRAINTILE
- EXISTING STORM SEWER
- ST EXISTING STORM MANHOLE
- OE EXISTING OVERHEAD ELECTRIC

LEGEND - PROPOSED - SITE

- CONSTRUCTION LIMITS
- EXISTING FENCE REMOVAL
- SL SEDIMENT CONTROL LOG
- SF SILT FENCE
- TREE TO BE REMOVED
- CONSTRUCTION STAGING AREA
- VEGETATION STRIPPING AND SOIL RIPPING
- STORMWATER INLET PROTECTION

REMOVALS AND EROSION CONTROL NOTES:

1. SAWCUT FULL DEPTH AT JOINT BETWEEN BITUMINOUS PAVEMENT AND PROTECT EXISTING BITUMINOUS PAVEMENT. IF DAMAGED DURING WORK, PATCH BITUMINOUS PAVEMENT. ASPHALT PATCHING IS INCIDENTAL TO THE BID ITEM PRICE.
2. THE CONTRACTOR SHALL HAVE ACCESS TO STREET SWEEPING EQUIPMENT AT ALL TIMES. THE CONTRACTOR SHOULD BE AWARE OF WEATHER CONDITIONS AND SWEEP ANY STREETS WITH DEBRIS PRIOR TO ANY RAINFALL EVENT. STOCKPILING ON THE STREET DURING ANY RAINFALL EVENT SHALL NOT BE ALLOWED.
3. COORDINATE WITH OWNER TO ENSURE ACCEPTABLE TRAFFIC CONTROL REQUIREMENTS.
4. PRIVATE SUBGRADE ELECTRICAL SERVICE TO EXISTING LIGHT STANDARDS IS NOT SHOWN. VERIFY LOCATION WITH OWNER PRIOR TO EXCAVATION AND PROTECT EXISTING SERVICE.
5. EXISTING BASINS ALONG SOUTH CURB TO REMAIN. NO VEGETATION IS TO BE STRIPPED WITHIN BASIN LIMITS. CONTRACTOR IS RESPONSIBLE FOR MARKING BASIN LIMITS WITH LANDSCAPE ARCHITECT PRIOR TO STRIPPING WORK BEGINNING.
6. ALL INLET FEATURES AND SPLASH BLOCK FEATURES WITHIN CONSTRUCTION LIMITS SHALL HAVE SILT LOG INLET PROTECTION AS SHOWN.

90% DRAWINGS
NOT FOR CONSTRUCTION

I HEREBY CERTIFY THAT THIS PLAN, SPECIFICATION, OR REPORT WAS PREPARED BY ME OR UNDER MY DIRECT SUPERVISION AND THAT I AM A DULY LICENSED LANDSCAPE ARCHITECT UNDER THE LAWS OF THE STATE OF MINNESOTA.

PRINTED NAME -

SIGNATURE

DATE - LICENSE # -

#	BY	CHK	APP	DATE	RELEASE/REVISION DESCRIPTION

BARR ENGINEERING CO.
4300 MARKETPOINTE DRIVE
SUITE 200
MINNEAPOLIS, MN 55435
PH: 1-800-632-2277
WWW.BARR.COM

RWMWD
Ramsey-Washington Metro Watershed District

COCHRAN RECOVERY SERVICES RETROFIT

REMOVALS AND EROSION CONTROL PLAN

BARR PROJECT # 23621172.00
DWG # C-01
REV # -

CADD USER: ELLIS.ZAJKOWSKI FILE: M:\DESIGN\23621172.00_2025 RETROFIT SITES_COCHRAN RECOVERY SERVICES\23621172_COCHRAN_C-01_REMOVALS AND EROSION CONTROL PLAN.DWG PLOT SCALE: 1:2 PLOT DATE: 2/25/2025 11:09 AM

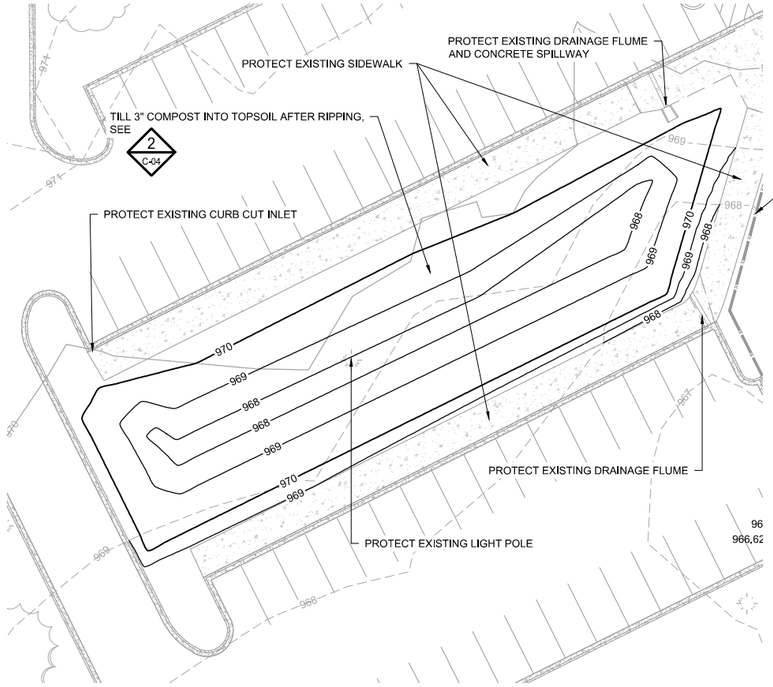

1 PLAN: CENTER BASIN GRADING

0 20 40
SCALE IN FEET

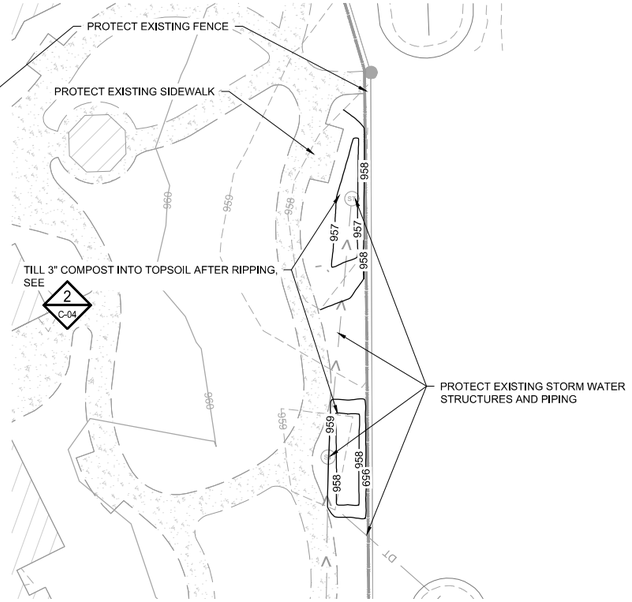

2 PLAN: EAST BASINS GRADING

0 20 40
SCALE IN FEET

LEGEND - EXISTING - SITE

- EXISTING MAJOR CONTOUR
- EXISTING MINOR CONTOUR
- EXISTING FENCE
- EXISTING CURB AND GUTTER
- EXISTING CONCRETE
- EXISTING RIPRAP
- EXISTING CULVERT
- EXISTING LIGHT POLE
- EXISTING DECIDUOUS TREE TO REMAIN
- EXISTING CONIFEROUS TREE TO REMAIN
- EXISTING DRAINTILE
- EXISTING STORM SEWER
- EXISTING STORM MANHOLE

LEGEND - PROPOSED - SITE

- CONSTRUCTION LIMITS
- MAJOR CONTOUR
- MINOR CONTOUR
- SPOT ELEVATION
- PROPOSED FENCE
- PROPOSED DRAINTILE

GRADING NOTES:

1. ANY COMPACTION OF PREVIOUSLY LOOSENED SOIL MUST BE RELOOSENED. RELOOSENING OF SOILS SHALL BE DONE AT CONTRACTOR'S EXPENSE.
2. NO RUBBER TIRED EQUIPMENT IN BASINS AFTER LOOSENING. LOW GROUND PRESSURE TRACKED EQUIPMENT ONLY.
3. PROPOSED GRADES SHALL BLEND INTO EXISTING GRADES AND STRUCTURES AS SHOWN.
4. ALL EXISTING PAVEMENT, STRUCTURES, FOUNDATIONS, AND FEATURES ARE TO BE PROTECTED, UNLESS MARKED OTHERWISE.

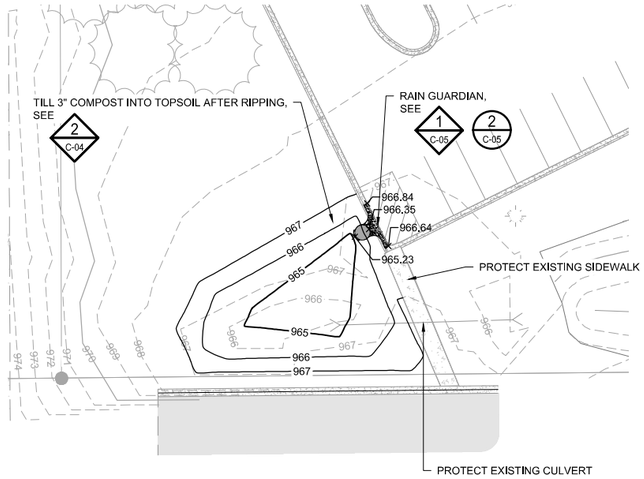

3 PLAN: WEST BASIN GRADING

0 20 40
SCALE IN FEET

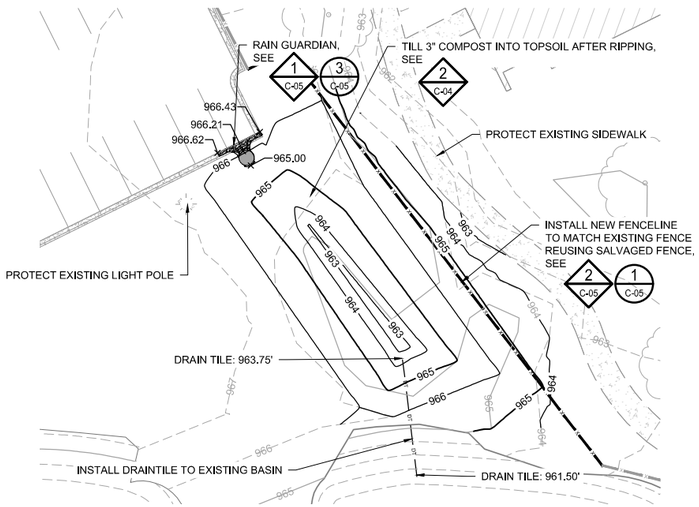

4 PLAN: SOUTH BASIN GRADING

0 20 40
SCALE IN FEET

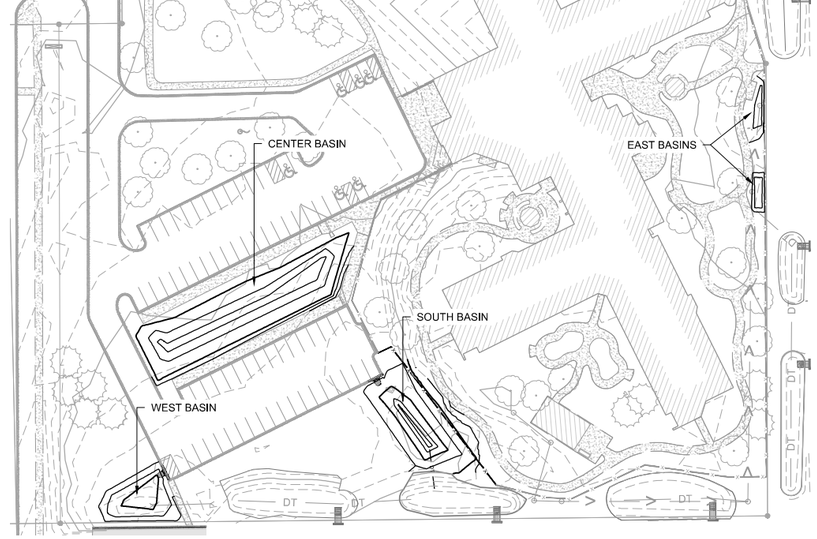

5 PLAN: GRADING LOCATIONS

0 60 120
SCALE IN FEET

90% DRAWINGS
NOT FOR CONSTRUCTION

I HEREBY CERTIFY THAT THIS PLAN, SPECIFICATION, OR REPORT WAS PREPARED BY ME OR UNDER MY DIRECT SUPERVISION AND THAT I AM A DULY LICENSED LANDSCAPE ARCHITECT UNDER THE LAWS OF THE STATE OF MINNESOTA.

PRINTED NAME -

SIGNATURE

DATE - LICENSE # -

#	BY	CHK	APP	DATE	RELEASE/REVISION DESCRIPTION

BARR ENGINEERING CO.
4300 MARKETPOINTE DRIVE
SUITE 200
MINNEAPOLIS, MN 55435

PH: 1-800-632-2277
WWW.BARR.COM

RWMWD
Ramsey-Washington Metro Watershed District

COCHRAN RECOVERY SERVICES RETROFIT

GRADING PLAN

BARR PROJECT # 23621172.00
DWG # C-02
REV # -

CADD USER: ELLIS ZAJKOWSKI FILE: M:\DESIGN\23621172.00_2025 RETROFIT SITES_COCHRAN RECOVERY SERVICES\23621172_COCHRAN_C-02_GRADING PLAN.DWG PLOT SCALE: 1:2 PLOT DATE: 2/25/2025 11:04 AM

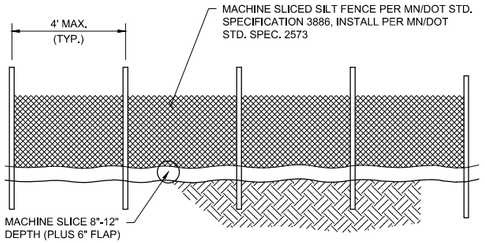

DOWNSTREAM VIEW

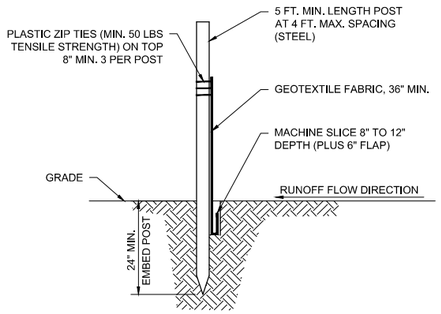

SECTION VIEW

NOTES:

1. INSTALL SILT FENCE PRIOR TO ANY GRADING WORK IN THE AREA TO BE PROTECTED AND MAINTAIN THROUGHOUT THE CONSTRUCTION PERIOD. REMOVE SILT FENCE AND ANY ACCUMULATED SEDIMENT IN CONJUNCTION WITH THE FINAL GRADING AND SITE STABILIZATION.
2. SILT FENCE MATERIALS AND INSTALLATION SHALL MEET THE REQUIREMENTS OF MN/DOT SPECIFICATIONS 2573 AND 3886.
3. NO HOLES OR GAPS SHALL BE PRESENT IN/UNDER SILT FENCE. PREPARE AREA AS NEEDED TO SMOOTH SURFACE OR REMOVE DEBRIS.
4. REMOVE ACCUMULATED SEDIMENT WHEN BUILD UP REACHES 1/3 OF FENCE HEIGHT. OR INSTALL A SECOND SILT FENCE DOWNSTREAM OF THE ORIGINAL FENCE AT A SUITABLE DISTANCE.
5. WHEN SPLICES ARE NECESSARY MAKE SPLICE AT POST ACCORDING TO SPLICE DETAIL. PLACE THE END POST OF THE SECOND FENCE INSIDE THE END POST OF THE FIRST FENCE. ROTATE BOTH POSTS TOGETHER AT LEAST 180 DEGREES TO CREATE A TIGHT SEAL WITH THE FABRIC MATERIAL. CUT THE FABRIC NEAR THE BOTTOM OF THE POSTS TO ACCOMMODATE THE 6 INCH FLAP, THEN DRIVE BOTH POSTS AND BURY THE FLAP AND COMPACT BACKFILL.

1 - DETAIL: SILT FENCE - MACHINE SLICED
NOT TO SCALE

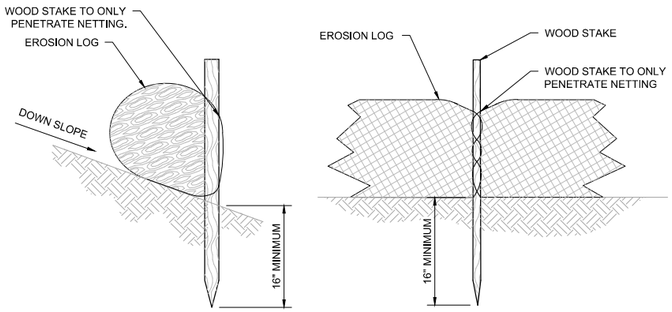

NOTES:

1. SEDIMENT CONTROL LOG MATERIALS AND INSTALLATION SHALL MEET THE REQUIREMENTS OF MN/DOT SPECIFICATIONS 2573 AND 3897.
2. REMOVE ACCUMULATED SEDIMENT WHEN BUILDUP REACHES 1/3 OF LOG HEIGHT.

2 - DETAIL: SEDIMENT CONTROL LOG
NOT TO SCALE

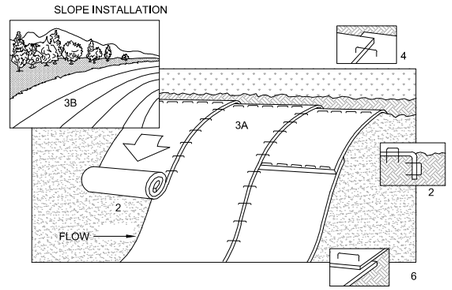

NOTES:

1. REFER TO MANUFACTURER RECOMMENDATIONS FOR STAPLE PATTERNS FOR SLOPE INSTALLATIONS.
2. PREPARE SOIL BY LOOSENING TOP 1-2 INCHES AND APPLY SEED (AND FERTILIZER WHERE REQUIRED) PRIOR TO INSTALLING BLANKETS. GROUND SHOULD BE SMOOTH AND FREE OF DEBRIS.
3. BEGIN (A) AT THE TOP OF THE SLOPE AND ROLL THE BLANKETS DOWN OR (B) AT ONE END OF THE SLOPE AND ROLL THE BLANKETS HORIZONTALLY ACROSS THE SLOPE.
4. THE EDGES OF PARALLEL BLANKETS MUST BE STAPLED WITH APPROXIMATELY 6" OVERLAP, WITH THE UPHILL BLANKET ON TOP.
5. WHEN BLANKETS MUST BE SPLICED DOWN THE SLOPE, PLACE BLANKETS END OVER END (SHINGLE STYLE) WITH APPROXIMATELY 6" OVERLAP. STAPLE THROUGH OVERLAPPED AREA, APPROXIMATELY 12" APART.
6. BLANKET MATERIALS SHALL BE AS SPECIFIED OR AS APPROVED BY ENGINEER.

3 - DETAIL: EROSION CONTROL BLANKET - INSTALLATION
NOT TO SCALE

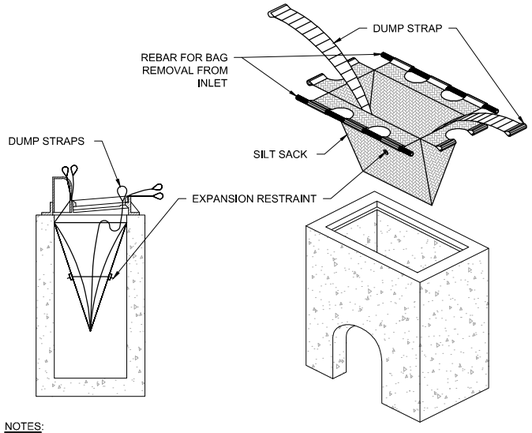

NOTES:

1. INSTALL INLET PROTECTION PRIOR TO ANY GRADING WORK IN THE AREA TO BE PROTECTED OR IMMEDIATELY FOLLOWING ANY CATCHBASIN INSTALLATION AND MAINTAIN THROUGHOUT THE CONSTRUCTION PERIOD.
2. MATERIALS SHALL BE SUFFICIENT TO ALLOW FLOW WHILE BLOCKING SEDIMENT. NO HOLES OR GAPS SHALL BE PRESENT IN/AROUND FILTER SACK.
3. CLEAN FILTER SACK AND REMOVE ACCUMULATED SEDIMENT AS REQUIRED TO ALLOW FLOW INTO THE CATCHBASIN AND PREVENT SEDIMENT FROM LEAVING THE DEVICE.
4. REMOVE DEVICE AND ANY ACCUMULATED SEDIMENT IN CONJUNCTION WITH THE FINAL GRADING AND SITE STABILIZATION.

4 - DETAIL: INLET PROTECTION, FILTER SACK TYPE
NOT TO SCALE
SEE ALSO MnDOT STD. PLATE NO. 5-297.405

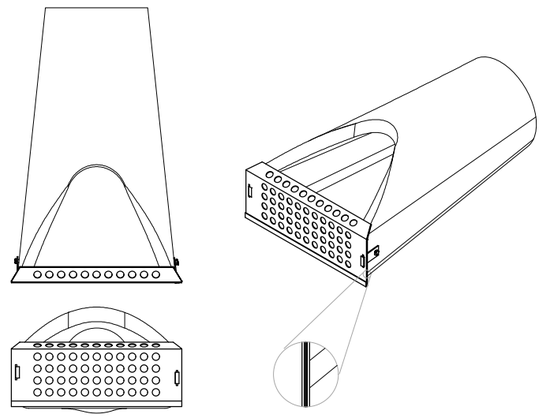

5 - DETAIL: CULVERT INLET PROTECTOR
NOT TO SCALE

90% DRAWINGS
NOT FOR CONSTRUCTION

I HEREBY CERTIFY THAT THIS PLAN, SPECIFICATION, OR REPORT WAS PREPARED BY ME OR UNDER MY DIRECT SUPERVISION AND THAT I AM A DULY LICENSED LANDSCAPE ARCHITECT UNDER THE LAWS OF THE STATE OF MINNESOTA.

PRINTED NAME _____

SIGNATURE _____

DATE _____ LICENSE # _____

#	BY	CHK	APP	DATE	RELEASE/REVISION DESCRIPTION

BARR ENGINEERING CO.
4300 MARKETPOINTE DRIVE
SUITE 200
MINNEAPOLIS, MN 55435
PH: 1-800-632-2277
WWW.BARR.COM

RWMWD
Ramsey-Washington Metro Watershed District

COCHRAN RECOVERY SERVICES RETROFIT

EROSION CONTROL DETAILS

BARR PROJECT # 23621172.00
DWG # C-03
REV # -

CADD USER: ELI B. ZAJKOWSKI FILE: M:\DESIGN\23621172.00_2025 RETROFIT SITES_COCHRAN RECOVERY SERVICES\23621172_COCHRAN_C-03_EROSION CONTROL DETAILS.DWG PLOT SCALE: 1:2 PLOT DATE: 2/25/2025 9:52 AM

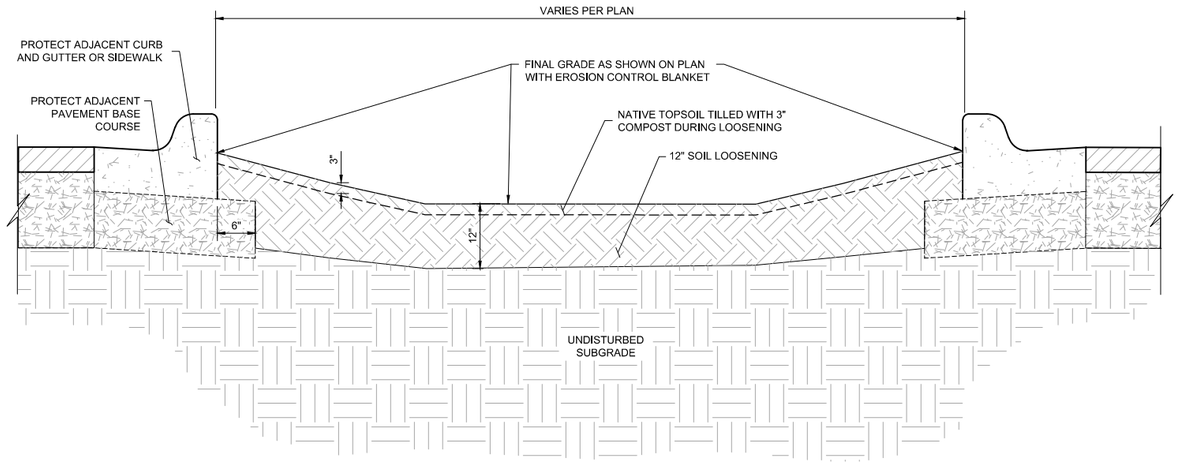

NOTES:

1. PRIOR TO COMMENCING WORK AT THE SITE, CONTRACTOR SHALL CONTACT GOPHER STATE ONE CALL AND HAVE ALL EXISTING UTLITIES FIELD LOCATED AND MARKED.
2. CONTRACTOR TO ENSURE NO EXISTING STRUCTURES ARE DISTRUBED OR DAMAGED BY MECHANICALLY LOOSENING OR TILLING OF COMPOST INTO NATIVE SOIL.

1 – SECTION: DEPRESSED BASIN, TYPICAL
NOT TO SCALE

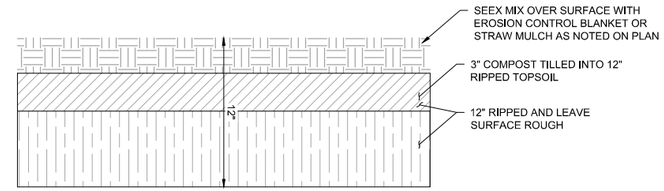

NOTE:
SEE SHEET L-01 FOR SEED MIXES AND EXTENTS

2 -- DETAIL: SOIL PREP
NOT TO SCALE

90% DRAWINGS
NOT FOR CONSTRUCTION

I HEREBY CERTIFY THAT THIS PLAN, SPECIFICATION, OR REPORT WAS PREPARED BY ME OR UNDER MY DIRECT SUPERVISION AND THAT I AM A DULY LICENSED LANDSCAPE ARCHITECT UNDER THE LAWS OF THE STATE OF MINNESOTA.

PRINTED NAME -

SIGNATURE

DATE - LICENSE # -

#	BY	CHK	APP	DATE	RELEASE/REVISION DESCRIPTION

BARR ENGINEERING CO.
4300 MARKETPOINTE DRIVE
SUITE 200
MINNEAPOLIS, MN 55435

PH: 1-800-632-2277
WWW.BARR.COM

RWMWD
Ramsey-Washington Metro Watershed District

COCHRAN RECOVERY SERVICES RETROFIT

SECTION DETAILS

BARR PROJECT # 23621172.00
DWG # C-04
REV # -

CADD USER: ELLIS, ZAJKOWSKI FILE: M:\DESIGN\23621172.00_2025 RETROFIT SITES_COCHRAN RECOVERY SERVICES\23621172_COCHRAN_C-04_SECTION DETAILS.DWG PLOT SCALE: 1:2 PLOT DATE: 2/25/2025 10:28 AM

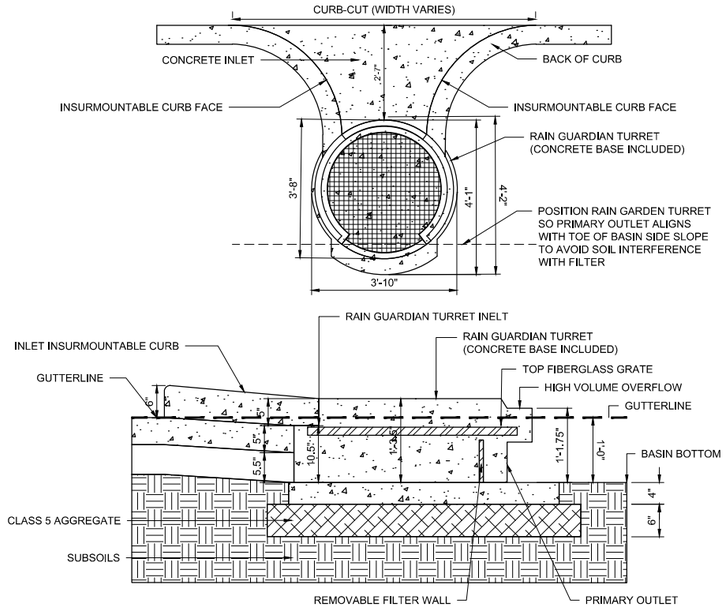

1 DETAIL: RAIN GUARDIAN TURRET
NOT TO SCALE

PLAN VIEW NOTES:
1. INLET WIDTH AND DISTANCE BETWEEN BACK OF CURB AND RAIN GUARDIAN TURRET MAY VARY WITH SITE CONDITIONS.

2. CONCRETE BASE EXTENDS BEYOND THE FILTER WALL OF THE RAIN GUARDIAN TURRET TO SERVE AS A SPLASH DISSIPATOR.

3D VIEWS



ELEVATION VIEW NOTES:
1. THE TOP OF THE CLASS 5 BASE (COMPACTED TO 95% STANDARD PROCTOR) IS PRECISELY 1' 4" BELOW THE GUTTERLINE ELEVATION.

SPECIFICATIONS:
1. STEEL REINFORCED, COLD JOINT SECURED MONOLITHIC CONCRETE STRUCTURE (1,030 LBS). CONCRETE SHALL HAVE A MINIMUM COMPRESSIVE STRENGTH OF 4,500 PSI AT 28 DAYS. CONCRETE AIR ENTRAINED (5% TO 8.5% BY VOLUME). MANUFACTURED AND DESIGNED TO ASTM C858.
2. THREE-POINT PICK USING RECESSED LIFTING POCKETS WITH A STANDARD HOOK.
3. FIBERGLASS TOP GRATE (32 LBS, 1-1/2" THICK) - 1,760 LB CONCENTRATED LOAD OR 409 LB/SQ-FT UNIFORM LOAD.

INSTALLATION NOTES:
1. INSTALL THE CLASS 5 BASE (COMPACTED TO 95% STANDARD PROCTOR). THE DISTANCE FROM THE BACK OF THE CURB MAY VARY BASED ON SITE CONDITIONS, BUT CONSIDERATIONS SHOULD INCLUDE SLOPE OF THE INLET AND BASIN SIDE SLOPES ADJACENT TO THE RAIN GUARDIAN TURRET. POSITION RAIN GUARDIAN TURRET SO PRIMARY OUTLET ALIGNS WITH TOE OF BASIN SIDE SLOPE TO AVOID SOIL INTERFERENCE WITH REMOVABLE FILTER WALL. EXCAVATE 1' 10" BELOW THE GUTTERLINE ELEVATION (I.E. THE BIORETENTION OVERFLOW ELEVATION) TO ACCOMMODATE THE 1' PONDING DEPTH, 6" CLASS 5 AGGREGATE, AND 4" RAIN GUARDIAN TURRET BASE (INCLUDED). THEREFORE, THE TOP OF THE CLASS 5 COMPACTED BASE IS PRECISELY 1' 4" BELOW THE GUTTERLINE ELEVATION. THE INLET TO THE RAIN GUARDIAN TURRET WILL BE 10-1/2" ABOVE THE TOP OF THE CONCRETE BASE AND 1-1/2" BELOW THE GUTTERLINE ELEVATION TO ACCOMMODATE A SLOPED INLET FROM THE GUTTER TO THE RAIN GUARDIAN TURRET.
2. SET RAIN GUARDIAN TURRET ON THE PREPARED CLASS 5 BASE.
3. INSTALL FRAMING FOR INLET BETWEEN RAIN GUARDIAN TURRET AND BACK OF CURB. TOP ELEVATIONS OF THE FRAMING SHOULD MATCH THE TOP OF THE CURB ON THE STREET SIDE AND THE TOP OF THE RAIN GUARDIAN TURRET ON THE BIORETENTION SIDE.
4. INSTALL EXPANSION/CONTRACTION JOINT MATERIAL OR A SHEET OF POLY TO SERVE AS A BOND BREAK BETWEEN RAIN GUARDIAN TURRET AND CONCRETE INLET BEFORE POURING INLET.
5. SIDE CURBS OF THE POURED INLET MUST HAVE AN INSURMOUNTABLE PROFILE TO PREVENT WATER FLOW FROM OVERTOPPING THE DOWNSTREAM SIDE OF THE INLET.
6. REMOVABLE FILTER WALL SHOULD BE INSTALLED WITH FILTER FABRIC ON THE INTERIOR SIDE OF THE RAIN GUARDIAN TURRET.

NOTES:
1. ALL FENCING COMPONENTS, INCLUDING POSTS, RAILS, MESH, TENSION BARS AND BANDS, CAPS, AND OTHER APPURTENANCES AS AVAILABLE SHALL BE VINYL COATED GREEN COLOR IN ACCORDANCE WITH MnDOT SPECIFICATIONS 3376, 3406, AND PER PROJECT SPECIFICATIONS, TO MATCH EXISTING FENCING IF SALVAGED FENCING IS UNABLE TO BE REINSTALLED.

2. PROVIDE SLEEVES AS REQUIRED FOR TRANSITIONS BETWEEN ADJACENT TOP AND BOTTOM RAIL SECTIONS. SLEEVE COLOR AND FINISH TO MATCH RAILS.

3. CONCRETE FOR FOOTINGS SHALL BE MIX 3G52 4500 PSI AIR-ENTRAINED CONCRETE PER MnDOT SPEC 2461.

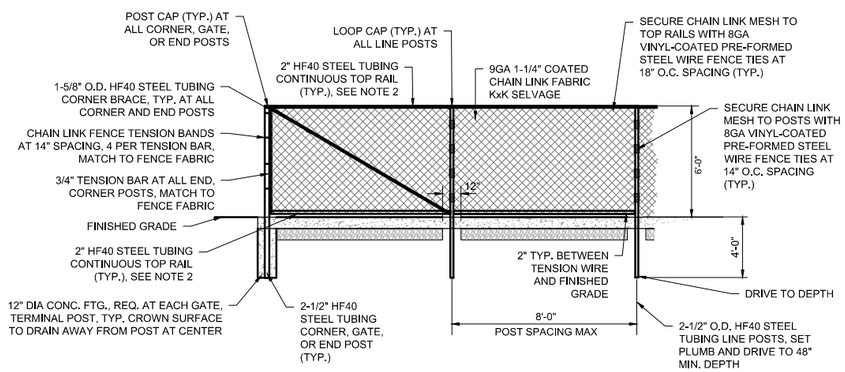

2 DETAIL: 6' CHAIN LINK FENCE, GREEN
NOT TO SCALE

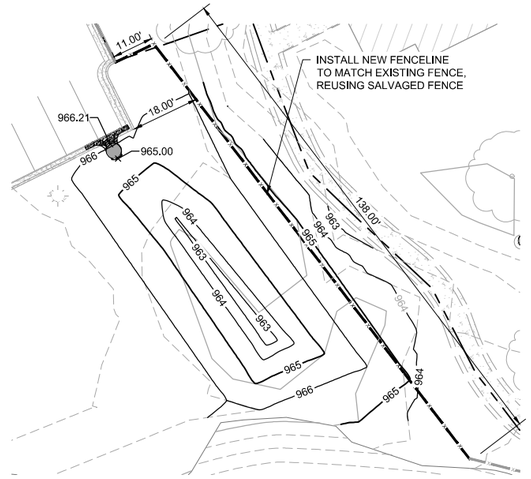

1 PLAN: FENCE INSTALLATION
0 20 40
SCALE IN FEET

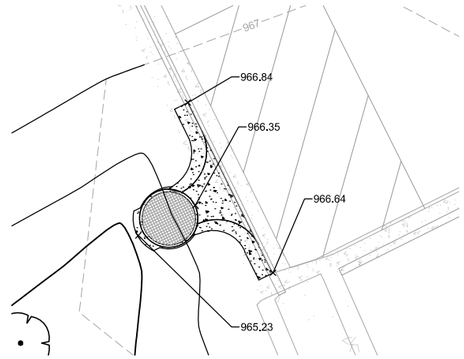

2 PLAN: SOUTHWEST RAIN GUARDIAN
0 5 10
SCALE IN FEET

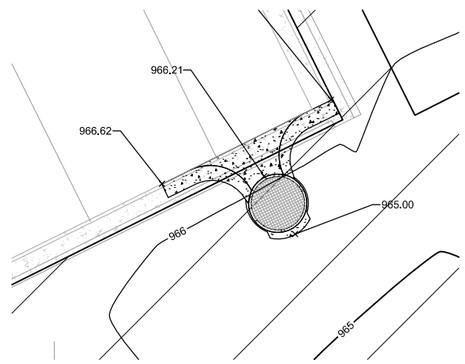

3 PLAN: SOUTHEAST RAIN GUARDIAN
0 5 10
SCALE IN FEET

LEGEND - EXISTING - SITE

- EXISTING FENCE
- EXISTING CURB AND GUTTER
- EXISTING CONCRETE
- 1380 EXISTING MAJOR CONTOUR
- 1379 EXISTING MINOR CONTOUR
- EXISTING LIGHT POLE

LEGEND - PROPOSED - SITE

- PROPOSED CONSTRUCTION LIMITS
- 1380 PROPOSED MAJOR CONTOUR
- 1379 PROPOSED MINOR CONTOUR
- PROPOSED FENCE
- 714.2 PROPOSED SPOT ELEVATION

90% DRAWINGS
NOT FOR CONSTRUCTION

I HEREBY CERTIFY THAT THIS PLAN, SPECIFICATION, OR REPORT WAS PREPARED BY ME OR UNDER MY DIRECT SUPERVISION AND THAT I AM A DULY LICENSED LANDSCAPE ARCHITECT UNDER THE LAWS OF THE STATE OF MINNESOTA.

PRINTED NAME _____
SIGNATURE _____
DATE _____ LICENSE # _____

#	BY	CHK	APP	DATE	RELEASE/REVISION DESCRIPTION
-					

BARR ENGINEERING CO.
4300 MARKETPOINTE DRIVE
SUITE 200
MINNEAPOLIS, MN 55435
PH: 1-800-632-2277
WWW.BARR.COM

RWMWD
Ramsey-Washington Metro Watershed District

COCHRAN RECOVERY SERVICES RETROFIT

CIVIL DETAILS

BARR PROJECT # 23621172.00
DWG # C-05
REV # -

CADD USER: ELLIS. ZALKOWSKI FILE: M:\DESIGN\23621172.00_2025 RETROFIT SITES_COCHRAN RECOVERY SERVICES\23621172_COCHRAN_C-05_CIVIL DETAILS.DWG PLOT SCALE: 1:2 PLOT DATE: 2/25/2025 10:43 AM

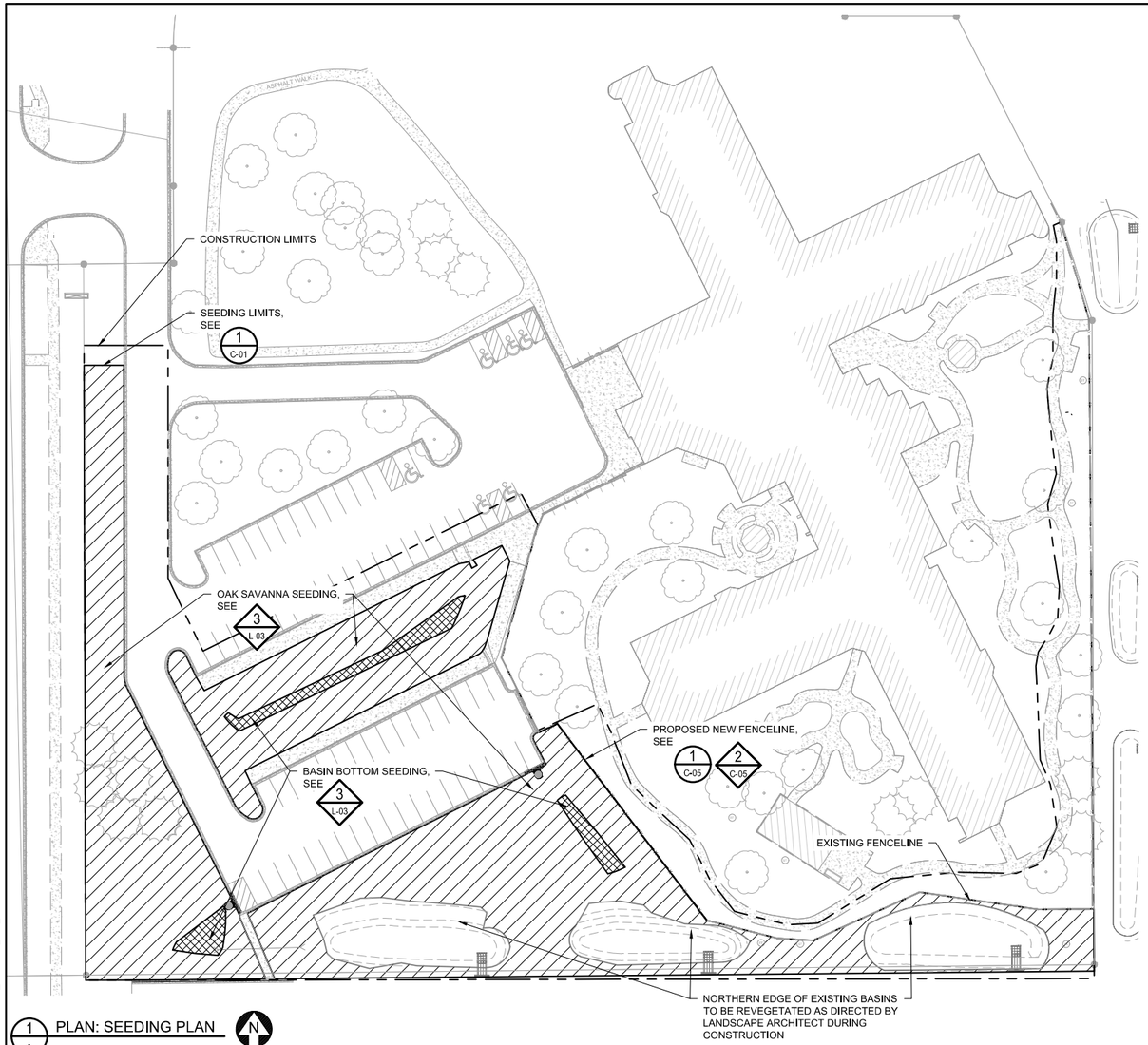

1 PLAN: SEEDING PLAN

0 40 80

SCALE IN FEET

N

LEGEND - EXISTING - SITE

- EXISTING MAJOR CONTOUR (1380)
- EXISTING MINOR CONTOUR (1379)
- EXISTING FENCE
- EXISTING CURB AND GUTTER
- EXISTING CONCRETE
- EXISTING RIPRAP
- EXISTING CULVERT
- EXISTING LIGHT POLE
- EXISTING DECIDUOUS TREE
- EXISTING CONIFEROUS TREE
- EXISTING DRAINTILE
- EXISTING STORM SEWER
- EXISTING STORM MANHOLE (ST)

LEGEND - PROPOSED - SITE

- CONSTRUCTION LIMITS
- OAK SAVANNA SEED MIX - 0.95 AC
- BASIN BOTTOM SEED MIX - 0.04 AC

Oak Savanna Seed Mix				
Scientific Name	**Common Name**	**% of Mix**	**Seeds/SqFt**	**PLS Rate lbs/ac**
Grasses				
Bouteloua curtipendula	Side-oats Grama	4.80%	6.14	1.68
Bromus kalmii	Prairie Brome	1.37%	1.41	0.48
Elymus hystrix	Bottlebrush Grass	2.74%	2.68	0.96
Elymus trachycaulus	Slender Wheat Grass	2.74%	2.43	0.96
Elymus virginicus	Virginia Wild Rye	2.40%	1.30	0.84
Koeleria macrantha	Junegrass	0.17%	3.86	0.06
Schizachyrium scoparium	Little Bluestem	6.85%	13.22	2.40
	Subtotal	***21.07%***	***31.04***	***7.38***
Sedges/Rushes				
Carex blanda	Eastern Woodland Sedge	0.17%	0.28	0.06
Carex brevior	Plains Oval Sedge	0.69%	2.56	0.24
Carex molesta	Troublesome Sedge	0.17%	0.55	0.06
Carex sprengelii	Long-beaked Sedge	0.34%	0.44	0.12
	Subtotal	***1.37%***	***3.83***	***0.48***
Forbs				
Achillea millefolium	Yarrow	0.15%	1.16	0.02
Agastache foeniculum	Fragrant Giant Hyssop	0.35%	1.39	0.04
Amorpha canescens	Leadplant	0.14%	0.28	0.05
Anemone canadensis	Canada Anemone	0.06%	0.50	0.02
Anemone virginiana	Tall Thimbleweed	0.06%	0.25	0.02
Aquilegia canadensis	Columbine	0.17%	0.84	0.06
Artemisia ludoviciana	Prairie Sage	0.03%	1.10	0.01
Asclepias syriaca	Common Milkweed	0.34%	0.18	0.12
Coreopsis palmata	Prairie Coreopsis	0.06%	0.09	0.02
Dalea purpurea	Purple Prairie Clover	1.37%	2.64	0.48
Dalea candida	White Prairie Clover	0.51%	1.26	0.18
Desmodium canadense	Showy Tick-trefoil	0.83%	0.58	0.29
Drymocallis arguta	Prairie Cinquefoil	0.11%	3.04	0.04
Helianthus maximiliani	Maximillian's Sunflower	0.17%	0.29	0.06
Lespedeza capitata	Round-headed Bushclover	0.26%	0.26	0.09
Liatris aspera	Rough Blazing Star	0.06%	0.14	0.02
Monarda fistulosa	Wild Bergamot	0.11%	0.93	0.04
Oenothera biennis	Common Evening Primrose	0.17%	1.98	0.06
Rosa arkansana	Prairie Rose	0.17%	0.02	0.06
Rudbeckia hirta	Black-eyed Susan	0.40%	4.87	0.14
Solidago nemoralis	Gray Goldenrod	0.09%	3.31	0.03
Solidago rigida	Stiff Goldenrod	0.17%	0.90	0.06
Solidago speciosa	Showy Goldenrod	0.09%	1.05	0.03
Symphyotrichum lateriflorum	Calico Aster	0.03%	1.10	0.01
Symphyotrichum oolentangiense	Sky-blue Aster	0.17%	1.76	0.06
Verbena stricta	Hoary Vervain	0.26%	0.93	0.09
Veronicastrum virginicum	Culver's Root	0.03%	1.76	0.01
Zizia aptera	Heart-leaved Alexanders	0.14%	0.21	0.05
	Subtotal	***6.17%***	***32.82***	***2.16***
Cover Crop				
Avena sativa	Oats (April-August), Winter Wheat (Sept.-Nov), or QuickGuard (winter seeding)	71.39%	11.00	25.00
Total		**100.00%**	**78.69**	**35.02**

Basin Bottom Seed Mix				
Scientific Name	**Common Name**	**% of Mix**	**Seeds/SqFt**	**PLS Rate (lbs/ac)**
Grasses				
Calamagrostis canadensis	Canada Blue Joint Grass	0.10%	4.11	0.04
Elymus riparius	Riverbank Wild Rye	2.40%	0.80	0.75
Glyceria grandis	American Manna Grass	0.50%	3.86	0.15
Poa palustris	Fowl Bluegrass	0.30%	3.82	0.08
Spartina pectinata	Prairie Cordgrass	3.20%	2.42	1.00
Tridens flavus	Purpletop	1.60%	4.80	0.50
	Subtotal	***8.2%***	***19.81***	***2.52***
Sedges/Rushes				
Carex lacustris	Lake Sedge	0.2%	0.24	0.06
Carex sprengelii	Long-beaked Sedge	0.4%	0.44	0.12
Scirpus atrovirens	Green Bulrush	0.6%	33.79	0.2
Scirpus cyperinus	Wool Grass	0.1%	24.98	0.04
	Subtotal	***1.3%***	***59.45***	***0.42***
Forbs				
Anemone canadensis	Canada Anemone	0.30%	0.24	0.08
Asclepias incarnata	Swamp Milkweed	1.30%	0.70	0.40
Boltonia asteroides	False Aster	0.10%	2.35	0.04
Chamaecrista fasciculata	Partridge Pea	2.60%	0.80	0.80
Doellingeria umbellata	Flat-Topped Aster	0.10%	0.74	0.03
Euthamia graminifolia	Grass-Leaved Goldenrod	0.10%	2.57	0.02
Helianthus grosseserratus	Sawtooth Sunflower	0.20%	0.29	0.06
Helianthus maximiliani	Maximilian's Sunflower	0.30%	0.48	0.10
Lobelia siphilitica	Great Blue Lobelia	0.10%	5.51	0.03
Monarda fistulosa	Wild Bergamot	0.40%	3.12	0.12
Pycnanthemum virginianum	Virginia mountain mint	0.10%	3.23	0.04
Silphium perfoliatum	Cup Plant	2.60%	0.41	0.80
Symphyotrichum ericoides	Heath Aster	0.30%	5.88	0.08
Symphyotrichum novae-angliae	New England Aster	0.30%	1.94	0.08
Vernonia fasciculata	Ironweed	0.30%	0.88	0.10
	Subtotal	***9.0%***	***29.14***	***2.78***
Cover Crop				
Avena sativa	Oats (April-August), Winter Wheat (Sept.-Nov), or QuickGuard (winter seeding)	80.10%		25.00
	Subtotal	***81.4%***		***25.00***
	Total	**100%**	**108.40**	**30.72**

SEEDING NOTES:

1. ANY EXOTIC INVASIVE PLANTS AND WEEDS WITHIN THE SEEDING AREAS SHALL BE SPRAYED WITH HERBICIDE 14 DAYS PRIOR TO SEEDING OR AS PER MANUFACTURE'S RECOMMENDATION. SIGNAGE INDICATING THE USE OF HERBICIDES MUST BE POSTED ON SITE.
2. ALL HERBICIDE APPLICATION SHALL BE APPLIED BY A LICENSED APPLICATOR WITHIN THE STATE OF MINNESOTA.
3. SEED IN ACCORDANCE WITH THE SPECIFICATIONS. SEEDING IS TO TAKE PLACE IMMEDIATELY FOLLOWING FINAL GRADING AND SOIL PLACEMENT TO PREVENT EROSION AND COMPACTION.
4. CONFIRM ALL QUANTITIES, SHAPES, AND LOCATIONS OF ALL SEEDING AREAS; ADJUST QUANTITIES AS REQUIRED TO CONFORM TO THE SITE CONDITIONS. CONFIRM ANY ADJUSTMENTS WITH THE LANDSCAPE ARCHITECT.
5. COVER CROP IS TO BE SEEDED WITHIN ALL AREAS PER SEED MIXES.
6. EXISTING SOUTHERN BASINS TO BE REVEGETATED ALONG NORTHERN EDGES AS NEEDED PER LANDSCAPE ARCHITECT'S DIRECTION DURING CONSTRUCTION.
7. AFTER SEEDING, EROSION CONTROL BLANKET MATERIAL SHALL BE SPREAD OVER ENTIRE BASIN SEEDING AREAS AND STRAW MULCH OVER NON-BASIN SEEDING AREAS. SEE SHEET C-04, DETAIL 3.
8. REFER TO SPECIFICATIONS FOR ADDITIONAL INFORMATION. IN THE CASE OF ANY DISCREPANCIES BETWEEN THIS DETAIL, PLANS, OR SPECIFICATIONS, THE SPECIFICATIONS SHALL GOVERN.

90% DRAWINGS
NOT FOR CONSTRUCTION

I HEREBY CERTIFY THAT THIS PLAN, SPECIFICATION, OR REPORT WAS PREPARED BY ME OR UNDER MY DIRECT SUPERVISION AND THAT I AM A DULY LICENSED LANDSCAPE ARCHITECT UNDER THE LAWS OF THE STATE OF MINNESOTA.

PRINTED NAME -

SIGNATURE

DATE - LICENSE # -

#	BY	CHK	APP	DATE	RELEASE/REVISION DESCRIPTION
-	-	-	-	-	-
-	-	-	-	-	-
-	-	-	-	-	-
-	-	-	-	-	-
-	-	-	-	-	-
-	-	-	-	-	-

BARR ENGINEERING CO.
4300 MARKETPOINTE DRIVE
SUITE 200
MINNEAPOLIS, MN 55435

PH: 1-800-632-2277
WWW.BARR.COM

RWMWD
Ramsey-Washington Metro Watershed District

COCHRAN RECOVERY SERVICES RETROFIT

SEEDING PLAN

BARR PROJECT # 23621172.00
DWG # L-01
REV # -

CADD USER: ELI B. ZAJKOWSKI FILE: M:\DESIGN\23621172.00_2025 RETROFIT SITES_COCHRAN RECOVERY SERVICES\23621172_COCHRAN_L-01_SEEDING PLAN.DWG PLOT SCALE: 1:2 PLOT DATE: 2/25/2025 11:06 AM

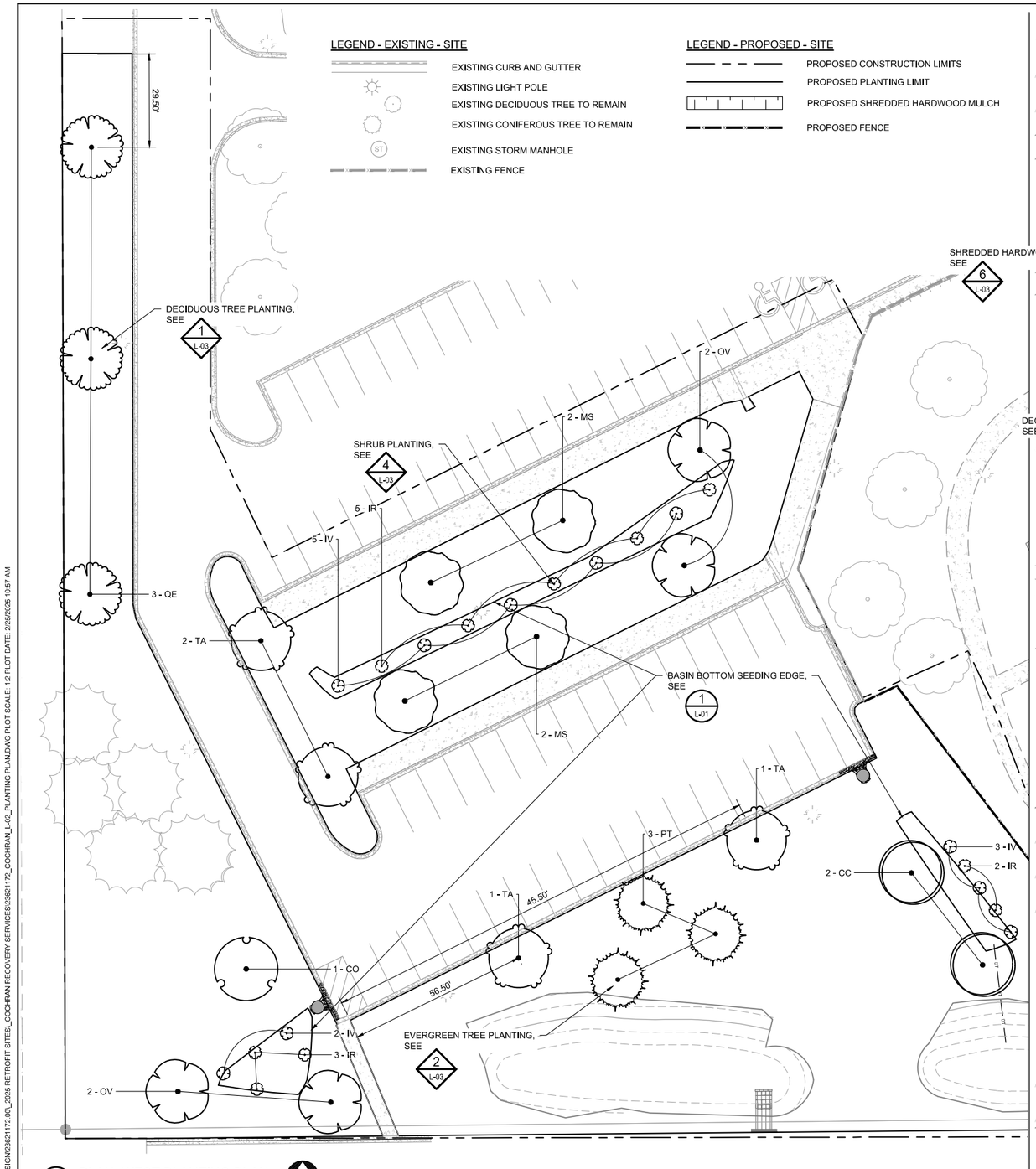

1 PLAN: WEST PLANTING PLAN

0 20 40

SCALE IN FEET

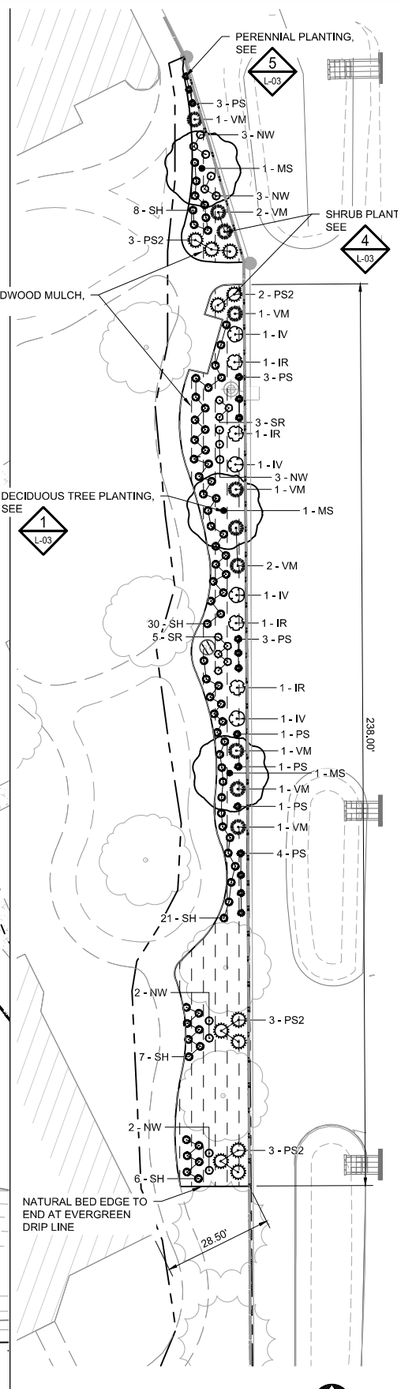

2 PLAN: EAST PLANTING PLAN

0 20 40

SCALE IN FEET

PLANT SCHEDULE

SYMBOL	CODE	BOTANICAL NAME	COMMON NAME	SIZE	CONTAINER	QTY
TREES						
	CO	CELTIS OCCIDENTALIS	COMMON HACKBERRY	#10	CONT.	2
	CC	CERCIS CANADENSIS	EASTERN REDBUD	#10	CONT.	3
	MS	MALUS X 'SPRING SNOW'	SPRING SNOW CRABAPPLE	#10	CONT.	7
	OV	OSTRYA VIRGINIANA	IRONWOOD	#10	CONT.	5
	PT	PINUS CONTORTA 'TAYLOR'S SUNBURST'	TAYLOR'S SUNBURST SHORE PINE	6`	B&B	3
	QE	QUERCUS ELLIPSOIDALIS	NORTHERN PIN OAK	#10	CONT.	3
	TA	TILIA AMERICANA	AMERICAN LINDEN	#10	CONT.	4
SHRUBS						
	IV	ILEX VERTICILLATA 'JIM DANDY'	JIM DANDY WINTERBERRY	#2	CONT.	14
	IR	ILEX VERTICILLATA 'RED SPRITE'	RED SPRITE WINTERBERRY	#2	CONT.	14
	NW	NEPETA X FAASSENII 'WALKER'S LOW'	WALKER'S LOW CATMINT	#1	CONT.	13
	PS	PANICUM VIRGATUM 'SHENANDOAH'	SHENANDOAH SWITCH GRASS	#1	CONT.	16
	PS2	PINUS MUGO 'SHERWOOD COMPACT'	SHERWOOD COMPACT MUGO PINE	#2	CONT.	11
	SR	SOLIDAGO RUGOSA 'FIREWORKS'	FIREWORKS WRINKLELEAF GOLDENROD	#1	CONT.	10
	SH	SPOROBOLUS HETEROLEPIS	PRAIRIE DROPSEED	#1	CONT.	72
	VM	VIBURNUM DENTATUM 'BLUE MUFFIN'	BLUE MUFFIN ARROWWOOD VIBURNUM	#2	CONT.	10

PLANTING NOTES:

1. PLANTING SHALL CONFORM TO MNDOT SPEC 2571, PLANT INSTALLATION AND ESTABLISHMENT, EXCEPT AS INDICATED OTHERWISE IN THE PLANTING SHEETS.
2. INFORM THE LANDSCAPE ARCHITECT OF PLANTING TWO DAYS PRIOR TO PLANT DELIVERY.
3. CONTRACTOR SHALL COORDINATE LAYOUT OF ALL PLANTS WITH DIRECTION OF LANDSCAPE ARCHITECT IN THE FIELD.
4. CONFIRM ALL QUANTITIES, SHAPES, AND LOCATIONS OF ALL PLANTING AREAS; ADJUST QUANTITIES AS REQUIRED TO CONFORM TO THE SITE CONDITIONS. CONFIRM ANY ADJUSTMENTS WITH THE LANDSCAPE ARCHITECT.
5. LOCATE ALL UTILITIES. NOTIFY THE LANDSCAPE ARCHITECT OF ANY CONFLICTS WITH PLANT INSTALLATION.
6. LONG-TERM STORAGE OF MATERIALS OR SUPPLIES ON-SITE WILL NOT BE ALLOWED. ANY PLANT STOCK NOT PLANTED ON DAY OF DELIVERY SHALL BE HEELED IN AND WATERED UNTIL INSTALLATION. PLANTS NOT MAINTAINED IN THIS MANNER WILL BE REJECTED.
7. THE PLAN TAKES PRECEDENCE OVER THE PLANT SCHEDULE IF DISCREPANCIES EXIST. ADVISE LANDSCAPE ARCHITECT OF ANY DISCREPANCIES.
8. THE CONTRACTOR SHALL AVOID DAMAGING EXISTING TREES. DO NOT STORE OR DRIVE HEAVY MATERIALS OVER TREE ROOTS. DO NOT DAMAGE TREE BARK OR BRANCHES.
9. THE CONTRACTOR SHALL KEEP PAVEMENTS, FIXTURES, AND BUILDINGS CLEAN AND UNSTAINED. ANY DAMAGE TO EXISTING FACILITIES SHALL BE REPAIRED AT THE CONTRACTOR'S EXPENSE. THE PROJECT SITE SHALL BE KEPT CLEAR OF CONSTRUCTION WASTES AND DEBRIS.
10. SOIL LOOSENING APPLIES TO ALL DISTURBED SOILS TO BE RE-VEGETATED, INCLUDING SEEDING/LANDSCAPE AREAS (NOT INCLUDING AREAS UNDER EXISTING TREE DRIP-LINES OR WITHIN 5-FEET OF BUILDING/PAVEMENT FOUNDATIONS), TO RESTORE SOIL PERMEABILITY.
11. SOIL REMEDIATION MUST BE IMPLEMENTED PRIOR TO ANY INSTALLATION OF TREES, SHRUBS, AND SEED. NO WHEELED EQUIPMENT SHALL BE USED ON LOOSENED SOIL - WIDE TRACK EQUIPMENT ONLY.
12. ALL DISTURBED AREAS TO BE RE-VEGETATED SHALL HAVE 12-INCH MINIMUM DEPTH OF SOIL LOOSENING.
13. LOOSENED SOILS SHALL HAVE A MAXIMUM OF 200 PSI IN TOP 12 INCHES.
14. MAINTENANCE SHALL BEGIN IMMEDIATELY AFTER EACH PORTION OF THE WORK IS IN PLACE. PLANT MATERIAL SHALL BE PROTECTED AND MAINTAINED UNTIL THE INSTALLATION OF PLANTINGS IS COMPLETE, INSPECTION HAS BEEN MADE, AND PLANTING IS ACCEPTED EXCLUSIVE OF THE GUARANTEE.
15. MAINTENANCE SHALL INCLUDE WATERING, WEEDING, MULCHING, REMOVAL OF DEAD MATERIAL PRIOR TO GROWING SEASON, RE-SETTING PLANTS AND PROPER GRADE, AND KEEPING PLANTS IN A PLUMB POSITION.
16. WATERING: MAINTAIN A WATERING SCHEDULE WHICH WILL THOROUGHLY WATER ALL PLANTS ONCE A WEEK. IN EXTREMELY HOT, DRY WEATHER, WATER MORE OFTEN AS REQUIRED BY INDICATIONS OF HEAT STRESS SUCH AS WILTING LEAVES. CHECK MOISTURE UNDER MULCH PRIOR TO WATERING TO DETERMINE NEED. CONTRACTOR SHALL MAKE THE NECESSARY ARRANGEMENTS FOR WATER.
17. REFER TO SPECIFICATIONS FOR ADDITIONAL INFORMATION. IN THE CASE OF ANY DISCREPANCIES BETWEEN THIS DETAIL, PLANS, OR SPECIFICATIONS, THE SPECIFICATIONS SHALL GOVERN.

PRELIMINARY DRAFT
NOT FOR CONSTRUCTION

I HEREBY CERTIFY THAT THIS PLAN, SPECIFICATION, OR REPORT WAS PREPARED BY ME OR UNDER MY DIRECT SUPERVISION AND THAT I AM A DULY LICENSED LANDSCAPE ARCHITECT UNDER THE LAWS OF THE STATE OF MINNESOTA.

PRINTED NAME -

SIGNATURE

DATE - LICENSE # -

#	BY	CHK	APP	DATE	RELEASE/REVISION DESCRIPTION
-	-	-	-	-	-
-	-	-	-	-	-
-	-	-	-	-	-
-	-	-	-	-	-
-	-	-	-	-	-
-	-	-	-	-	-

BARR
BARR ENGINEERING CO.
4300 MARKETPOINTE DRIVE
SUITE 200
MINNEAPOLIS, MN 55435
PH: 1-800-632-2277
WWW.BARR.COM

RWMWD
Ramsey-Washington Metro Watershed District

COCHRAN RECOVERY SERVICES RETROFIT

PLANTING PLAN

BARR PROJECT # 23621172.00
DWG # L-02
REV # -

CADD USER: ELLIS, ZAJKOWSKI FILE: M:\DESIGN\23621172.00_2025 RETROFIT SITES_COCHRAN RECOVERY SERVICES\23621172_COCHRAN_L-02_PLANTING PLAN.DWG PLOT SCALE: 1:2 PLOT DATE: 2/25/2025 10:57 AM

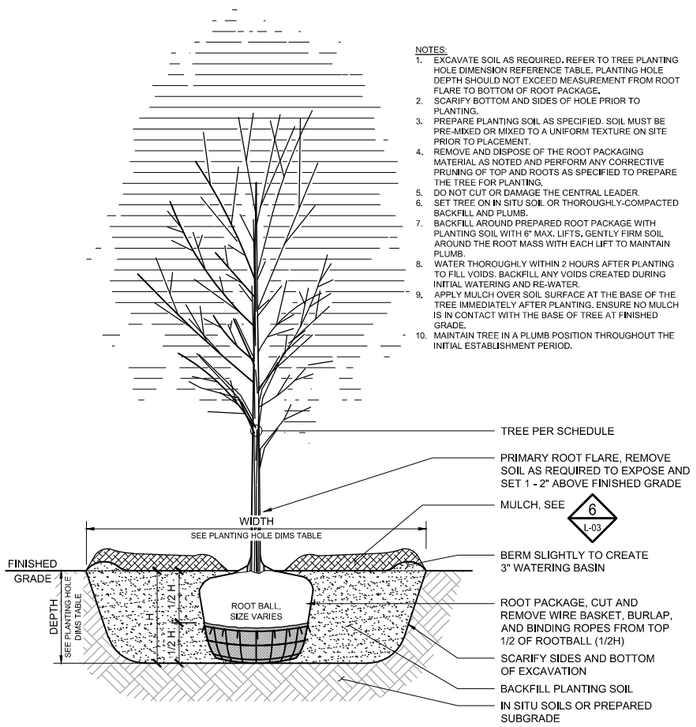

1 - DETAIL: DECIDUOUS TREE PLANTING, B&B
NOT TO SCALE

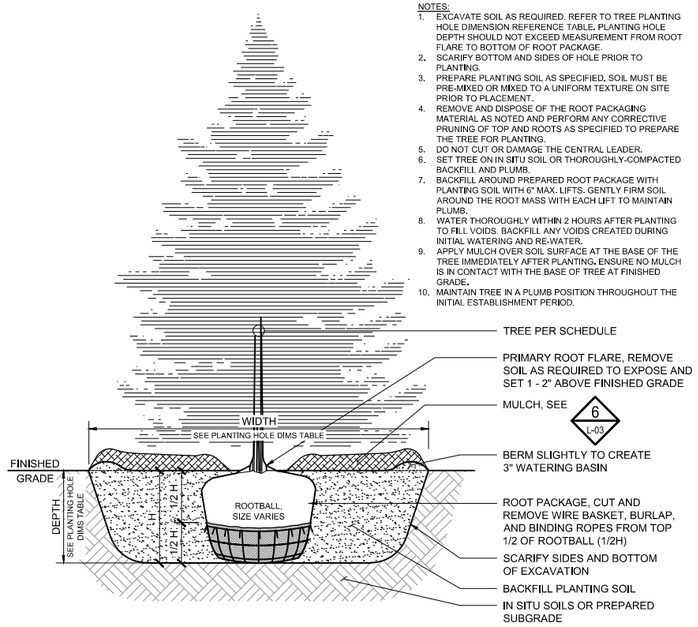

2 - DETAIL: EVERGREEN TREE PLANTING, B&B
NOT TO SCALE

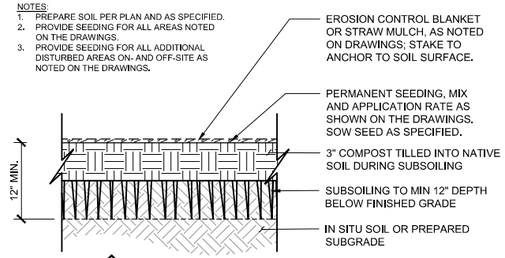

3 - DETAIL: PERMANENT SEEDING
NOT TO SCALE

NOTES:
1. EXCAVATE SOIL AS REQUIRED. REFER TO TREE PLANTING HOLE DIMENSION REFERENCE TABLE. PREPARE PLANTING SOIL PER PLAN AND AS SPECIFIED.
2. SCARIFY BOTTOM AND SIDES OF HOLE PRIOR TO PLANTING.
3. PREPARE PLANTING SOIL AS SPECIFIED. SOIL MUST BE PRE-MIXED OR MIXED TO A UNIFORM TEXTURE ON SITE PRIOR TO PLACEMENT.
4. REMOVE AND DISPOSE OF THE ROOT PACKAGING MATERIAL AS NOTED AND PERFORM ANY CORRECTIVE PRUNING OF TOP AND ROOTS AS SPECIFIED TO PREPARE THE SHRUB FOR PLANTING.
5. SET SHRUB ON IN SITU SOIL OR THOROUGHLY-COMPACTED BACKFILL AND PLUMB.
6. BACKFILL AROUND PREPARED ROOT PACKAGE WITH PLANTING SOIL WITH 6" MAX. LIFTS. GENTLY FIRM SOIL AROUND THE ROOT MASS WITH EACH LIFT TO MAINTAIN PLUMB.
7. WATER THOROUGHLY WITHIN 2 HOURS AFTER PLANTING TO FILL VOIDS. BACKFILL ANY VOIDS CREATED DURING INITIAL WATERING AND RE-WATER.
8. APPLY MULCH OVER SOIL SURFACE AT THE BASE OF THE SHRUB IMMEDIATELY AFTER PLANTING. ENSURE NO MULCH IS IN CONTACT WITH THE BASE OF SHRUB AT FINISHED GRADE.
9. MAINTAIN SHRUB IN A PLUMB POSITION THROUGHOUT THE INITIAL ESTABLISHMENT PERIOD.

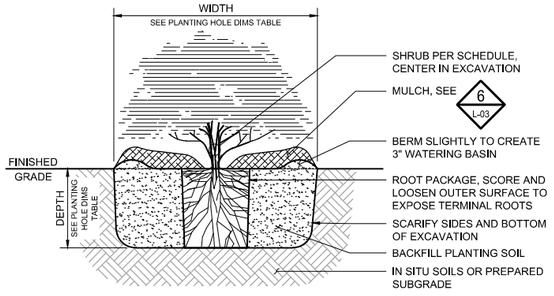

4 - DETAIL: SHRUB PLANTING
NOT TO SCALE

NOTES:
1. EXCAVATE SOIL AS REQUIRED. REFER TO TREE PLANTING HOLE DIMENSION REFERENCE TABLE. PREPARE PLANTING SOIL PER PLAN AND AS SPECIFIED.
2. SCARIFY BOTTOM AND SIDES OF HOLE PRIOR TO PLANTING.
3. PREPARE PLANTING SOIL AS SPECIFIED. SOIL MUST BE PRE-MIXED OR MIXED TO A UNIFORM TEXTURE ON SITE PRIOR TO PLACEMENT.
4. REMOVE AND DISPOSE OF THE ROOT PACKAGING MATERIAL AS NOTED AND PERFORM ANY CORRECTIVE PRUNING OF TOP AND ROOTS AS SPECIFIED TO PREPARE THE PLANT FOR PLANTING.
5. SET PLANT ON IN SITU SOIL OR THOROUGHLY-COMPACTED BACKFILL AND PLUMB.
6. BACKFILL AROUND PREPARED ROOT PACKAGE WITH PLANTING SOIL WITH 6" MAX. LIFTS. GENTLY FIRM SOIL AROUND THE ROOT MASS WITH EACH LIFT TO MAINTAIN PLUMB.
7. WATER THOROUGHLY WITHIN 2 HOURS AFTER PLANTING TO FILL VOIDS. BACKFILL ANY VOIDS CREATED DURING INITIAL WATERING AND RE-WATER.
8. APPLY MULCH OVER SOIL SURFACE AT THE BASE OF THE PLANT IMMEDIATELY AFTER PLANTING. ENSURE NO MULCH IS IN CONTACT WITH THE BASE OF PLANT AT FINISHED GRADE.
9. MAINTAIN PLANT IN A PLUMB POSITION THROUGHOUT THE INITIAL ESTABLISHMENT PERIOD.

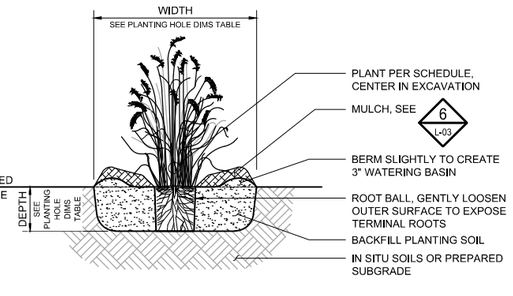

5 - DETAIL: PERENNIAL PLANTING
NOT TO SCALE

NOTES:
1. PREPARE SUBGRADE PER PLAN AND AS SPECIFIED.
2. PROVIDE MULCH AS SPECIFIED. ENSURE MULCH IS CERTIFIED TO BE WEED SEED FREE AND IS NOT CONTAMINATED WITH SOILS OR PESTS.
3. MULCH CONTAMINATED WITH SOIL MUST BE REMOVED AND REPLACED.

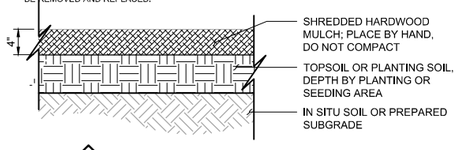

6 - DETAIL: HARDWOOD MULCH
NOT TO SCALE

90% DRAWINGS
NOT FOR CONSTRUCTION

I HEREBY CERTIFY THAT THIS PLAN, SPECIFICATION, OR REPORT WAS PREPARED BY ME OR UNDER MY DIRECT SUPERVISION AND THAT I AM A DULY LICENSED LANDSCAPE ARCHITECT UNDER THE LAWS OF THE STATE OF MINNESOTA.

PRINTED NAME -

SIGNATURE

DATE - LICENSE # -

#	BY	CHK	APP	DATE	RELEASE/REVISION DESCRIPTION

BARR ENGINEERING CO.
4300 MARKETPOINTE DRIVE
SUITE 200
MINNEAPOLIS, MN 55435
PH: 1-800-632-2277
WWW.BARR.COM
-

RWMWD
Ramsey-Washington Metro Watershed District

COCHRAN RECOVERY SERVICES RETROFIT

LANDSCAPE DETAILS

BARR PROJECT # 23621172.00
DWG # L-03
REV # -

CADD USER: ELLIS_ZAJKOWSKI FILE: M:\DESIGN\23621172.00_2025 RETROFIT SITES_COCHRAN RECOVERY SERVICES\23621172_COCHRAN_L-03_LANDSCAPE DETAILS.DWG PLOT SCALE: 1:2 PLOT DATE: 2/25/2025 10:57 AM

PROJECT DATUM:
HORIZONTAL: STATE PLANE (NAD83), NORTH, US FT **VERTICAL:** NAVD 88

MAPLEWOOD TOYOTA RETROFIT

RAMSEY-WASHINGTON METRO WATERSHED DISTRICT

MAPLEWOOD, MINNESOTA

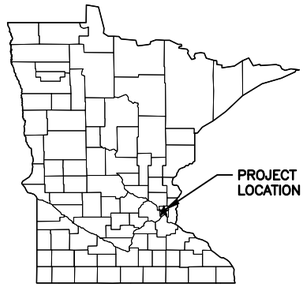

LOCATION MAP
NOT TO SCALE



VICINITY MAP
NOT TO SCALE

SHEET INDEX

SHEET	TITLE
G001	COVER SHEET, INDEX & VICINITY MAP
G002	NOTES
G003	TOPOGRAPHIC SURVEY
C001	REMOVALS & EROSION CONTROL PLAN
C002	CAST-IN-PLACE CONCRETE FOREBAY STRUCTURE
L001	LANDSCAPE PLAN
L002	LANDSCAPE DETAILS

REFERENCING

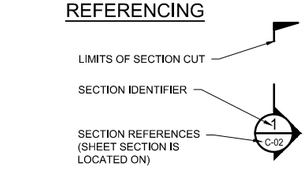

ABBREVIATIONS AND SYMBOLS

APPROX	APRROXIMATE
ASCE	AMERICAN SOCIETY OF CIVIL ENGINEERS
ASTM	AMERICAN SOCIETY FOR TESTING AND MATERIALS
CONC	CONCRETE
DIP	DUCTILE IRON PIPE
EL	ELEVATION
F.F.E.	FINISHED FLOOR ELEVATION
HARN	HIGH ACCURACY REFERENCE NETOWRK
ID	INSIDE DIAMETER
IE	INVERT ELEVATION
MAX	MAXIMUM
MIN	MINIMUM
NAVD	NORTH AMERICAN VERTICAL DATUM
NGVD	NATIONAL GEODETIC VERTICAL DATUM
NO.	NUMBER
OC	ON CENTER
PVC	POLYVINYL CHLORIDE
ROW	RIGHT-OF-WAY
TBD	TO BE DETERMINED
TYP	TYPICAL
@	AT
Ø	DIAMETER

NOTES:

1. COMPLY WITH ALL APPLICABLE LOCAL, STATE, AND FEDERAL CODES, PERMITS, AND REGULATIONS.
2. VERIFY ALL QUANTITIES, GRADES, AND DIMENSIONS.
3. EXISTING SITE INFORMATION BASED ON TOPOGRAPHIC SURVEY PREPARED BY W. BROWN LAND SURVEYING INC., DATED OCTOBER 22, 2024.
4. FIELD-LOCATE ALL SITE UTILITIES (PRIVATE AND PUBLIC) PRIOR TO STARTING THE WORK. ALL UTILITIES SHOWN ON THE PLANS ARE APPROXIMATE. ANY UTILITIES DAMAGED BY CONTRACTOR SHALL BE REPAIRED TO THE SATISFACTION OF UTILITY OWNER AT CONTRACTOR'S COST.

811

90% DRAFT
NOT FOR CONSTRUCTION

I HEREBY CERTIFY THAT THIS PLAN, SPECIFICATION, OR REPORT WAS PREPARED BY ME OR UNDER MY DIRECT SUPERVISION AND THAT I AM A DULY LICENSED PROFESSIONAL ENGINEER UNDER THE LAWS OF THE STATE OF MINNESOTA.

PRINTED NAME _____

SIGNATURE _____

DATE ___-___-___ LICENSE # _____

#	BY	CHK	APP	DATE	RELEASE/REVISION DESCRIPTION
A	XXX	XXX	XXX	XX/XX/XXXX	DESCRIPTION

BARR ENGINEERING CO.
4300 MARKETPOINTE DRIVE
SUITE 200
MINNEAPOLIS, MN 55435

PH: 1-800-632-2277
WWW.BARR.COM
MINNESOTA ENGINEERING FIRM
NUMBER 10104111545

RWMWD
Ramsey-Washington Metro Watershed District

MAPLEWOOD TOYOTA RETROFIT MAPLEWOOD, MINNESOTA PROJECT LOCATION AND SHEET INDEX	BARR PROJECT # 2362117200 DWG # G001 REV # A

ORIGINAL DRAWING SIZE: ANSI FULL BLEED D (11.00 X 17.00 INCHES); PLOT SCALE: 1:2 PLOT DATE: 2/24/2025 2:35 PM
CAD/D USER: OWEN Q. RICHEY FILE: M:\DES\MAP\2362\117200_2025 RETROFIT SITES_LAP\EVO\D 170\01\A\2362117200_G001.DWG

NOTES:

GENERAL

1. CONTRACTOR SHALL ASSUME FULL RESPONSIBILITY FOR ANY AND ALL DAMAGE RESULTING FROM CONTRACTOR'S WORK. CONTRACTOR SHALL REPAIR OR REMOVE, AND/OR REPLACE ITEMS THAT ARE DAMAGED DUE TO CONTRACTOR'S ACTIVITIES. REPAIR OR REPLACEMENT WILL BE AT THE EXPENSE OF CONTRACTOR AND MUST BE PERFORMED TO THE CONDITION, AT MINIMUM, EQUAL TO THE CONDITION PRIOR TO START OF THE WORK.
2. ANY PUBLIC INFRASTRUCTURE DAMAGE RESULTING FROM THE CONTRACTORS ACTIVITIES, INCIDENTAL OR OTHERWISE, SHALL BE REPAIRED/REPLACED TO THE SATISFACTION OF THE CITY AT NO COST TO THE CITY.
3. SITE SHALL BE KEPT REASONABLY FREE FROM DEBRIS, TRASH AND CONSTRUCTION WASTES RESULTING FROM THE PERFORMANCE OF THE WORK. ALL TRASH, DEBRIS, AND WASTE MATERIALS SHALL BE REMOVED FROM THE SITE AND DISPOSED OF BY THE CONTRACTOR AT A LICENSED WASTE DISPOSAL OR RECYCLING FACILITY, ON A REGULAR BASIS.

SUBMITTALS

CONTRACTOR SHALL SUBMIT THE FOLLOWING TO THE OWNER'S REPRESENTATIVE FOR REVIEW AND DOCUMENTATION; MATERIAL CERTIFICATION PRODUCT INFORMATION FOR:

1. CAST-IN-PLACE CONCRETE MIX DESIGN(S)
2. BITUMINOUS PAVEMENT MIX DESIGN(S) AND TACK COAT PRODUCT INFORMATION
3. IMPORT TOPSOIL SOURCE AND CERTIFICATION W/ GRADATION, SOIL TESTING, PERCENT ORGANICS PER MNDOT
4. SEED MIX AND VENDOR INFORMATION

LOCATION OF WORK

1. THE WORK SHALL BE LOCATED AS SHOWN ON THE DRAWINGS. IT MAY BE NECESSARY FOR ENGINEER TO SHIFT LINES A REASONABLE AMOUNT TO AVOID AN OBSTRUCTION TO THE CONSTRUCTION WORK OR TO REDUCE UTILITY/RIGHT-OF-WAY DIFFICULTIES. CONTRACTOR WILL NOT BE ALLOWED ANY ADDITIONAL COMPENSATION DUE TO MINOR SHIFT OF LINES. ADDITIONAL COMPENSATION WILL BE ALLOWED ONLY FOR LENGTHENING OF LINES, OR FOR PROVIDING ADDITIONAL FITTINGS.

SAFETY

1. IN ACCORDANCE WITH ACCEPTED CONSTRUCTION PRACTICES, THE CONTRACTOR IS RESPONSIBLE FOR JOB-SITE CONDITIONS AND SAFETY PROCEDURES AND PROGRAMS, INCLUDING SAFETY AND HEALTH OF ALL PERSONS AND PROPERTY, ON THOSE PORTIONS OF THE PROJECT AREA AFFECTED BY OR USED BY THE CONTRACTOR, EMPLOYEES, SUBCONTRACTORS, AGENTS, AND OTHERS DURING PERFORMANCE OF THE WORK. THIS REQUIREMENT WILL APPLY CONTINUOUSLY AND NOT BE LIMITED TO NORMAL WORKING HOURS. THE CONTRACTOR IS RESPONSIBLE FOR THE PROTECTION OF PROPERTY AND THE SAFETY AND HEALTH OF ITS EMPLOYEES, SUBCONTRACTORS, SUPPLIERS, AGENTS AND OTHERS WITHIN THE PROJECT AREA.
2. CONTRACTOR SHALL BE RESPONSIBLE FOR KEEPING THE SITE PERIMETER SAFE FOR PUBLIC ON OR ADJACENT TO SITE FOR THE DURATION OF THE WORK. CONTRACTOR SHALL BE RESPONSIBLE FOR ALL SITE SAFETY PRECAUTIONS.

EXISTING CONDITIONS

1. PRIOR TO COMMENCING WORK AT THE SITE, CONTRACTOR SHALL CONTACT GOPHER STATE ONE CALL AND HAVE ALL EXISTING UTILITIES, PUBLIC AND PRIVATE, FIELD LOCATED AND MARKED. EXISTING UTILITIES SHALL BE PROTECTED UNLESS OTHERWISE INDICATED. ANY UTILITIES DAMAGED BY CONTRACTOR SHALL BE REPAIRED OR REPLACED AT EXPENSE OF CONTRACTOR.
2. IF SITE CONDITIONS OR UTILITIES DIFFER SIGNIFICANTLY FROM THAT SHOWN, CONTRACTOR SHALL NOTIFY ENGINEER IMMEDIATELY.
3. ALL EXISTING UTILITIES MUST REMAIN OPERATIONAL FOR THE DURATION OF CONSTRUCTION, UNLESS OTHERWISE NOTED.
4. CONTRACTOR SHALL NOT DISTURB EXISTING VEGETATION AREAS WHERE GRADING IS NOT TO OCCUR OR, IN ANY CASE, OUTSIDE OF CONSTRUCTION LIMITS.

DEMOLITION

1. CONTRACTOR SHALL PROTECT ALL EXISTING STRUCTURES AND UTILITIES NOT DESIGNATED FOR REMOVAL. EXISTING UTILITIES AND FACILITIES NOT DESIGNATED FOR REMOVAL SHALL REMAIN OPERATIONAL FOR THE DURATION OF THE WORK. DEMOLISHED DEBRIS, UNLESS OTHERWISE NOTED, SHALL BECOME THE PROPERTY OF CONTRACTOR AND TRANSPORTED OFF SITE FOR RECYCLING OR DISPOSAL IN ACCORDANCE WITH ALL APPLICABLE LAWS AND REGULATIONS.
2. NO CONCRETE OR RUBBLE SHALL BE BACKFILLED ONSITE. BURNING OF DEBRIS ON SITE SHALL NOT BE ALLOWED.
3. REMOVE AND DISPOSE OF ALL CONCRETE CURB AND GUTTER SHOWN ON THE PLANS. SAWCUT ALL PAVEMENT FULL DEPTH OR REMOVE TO THE NEAREST EXISTING CONCRETE JOINT. SAWCUTTING SHALL BE INCIDENTAL TO PAVEMENT REMOVAL ITEMS, NO ADDITIONAL COMPENSATION WILL BE MADE.

EARTHWORK

1. EXCESS EXCAVATED MATERIAL AND UNSUITABLE MATERIAL SHALL BECOME THE PROPERTY OF THE CONTRACTOR AND DISPOSED OF OFFSITE.
2. THE ELEVATIONS ON THE PLANS INDICATE FINISHED GRADES.
3. GRADING TOLERANCES FOR SUB CUT:

   VERTICAL +/- 0.1 FEET

   HORIZONTAL +/- 1.0 FEET

CONCRETE

1. CONCRETE SHALL MEET THE MATERIAL REQUIREMENTS OF MNDOT STANDARD SPECIFICATION 2461.2, MIX 3G52.
2. REINFORCEMENT BARS SHALL MEET THE MATERIAL REQUIREMENTS OF MNDOT STANDARD SPECIFICATION 3301 FOR THE TYPES AND DIMENSIONS SHOWN.

EROSION PREVENTION AND SEDIMENTATION CONTROL

1. EROSION PREVENTION PRACTICES
   - A. PHASE ALL WORK TO MINIMIZE EROSION AND MAINTAIN VEGETATIVE COVER TO THE EXTENT POSSIBLE.
   - B. ALL EXPOSED SOILS MUST BE STABILIZED NO LATER THAN 14 DAYS AFTER THE CONSTRUCTION ACTIVITY IN THAT PORTION OF THE SITE HAS TEMPORARILY OR PERMANENTLY CEASED, INCLUDING STOCKPILES WITH SIGNIFICANT SILT, CLAY OR ORGANIC COMPONENTS.
   - C. ALL EROSION CONTROL MEASURES MUST BE INSTALLED AND MAINTAINED BY CONTRACTOR ACCORDING TO THE DETAILS INCLUDED IN THE CONSTRUCTION DOCUMENTS AND IN ACCORDANCE WITH THE PRODUCT MANUFACTURER'S RECOMMENDATIONS.
2. SEDIMENT CONTROL PRACTICES
   - A. INSTALL ALL DOWN-GRADIENT PERIMETER CONTROLS BEFORE ANY UP-GRADIENT DISTURBANCE BEGINS. MAINTAIN PERIMETER CONTROLS UNTIL FINAL STABILIZATION.
   - B. TIMING AND INSTALLATION OF SEDIMENT CONTROL DEVICES CAN BE ADJUSTED TO ACCOMMODATE SHORT-TERM ACTIVITIES SUCH AS CLEARING AND GRUBBING OR VEHICLE PASSAGE. ANY SHORT-TERM ACTIVITY MUST BE COMPLETED AS QUICKLY AS POSSIBLE AND THE SEDIMENT CONTROL PRACTICES MUST BE INSTALLED IMMEDIATELY AFTER THE ACTIVITY IS COMPLETED AND IN ALL CASES PRIOR TO THE NEXT PRECIPITATION EVENT.
   - C. IF PRESENT, ALL STORM SEWER INLETS AND OUTLETS SHALL BE PROTECTED WITH APPROPRIATE BMP'S DURING THE WORK. THESE PRACTICES SHALL REMAIN IN PLACE UNTIL THE POTENTIAL SOURCES FOR DISCHARGING SEDIMENT TO INLETS HAVE BEEN STABILIZED.
   - D. TEMPORARY SOIL STOCKPILES MUST HAVE SILT FENCE OR OTHER EFFECTIVE SEDIMENT CONTROLS. SOIL STOCKPILES SHALL NOT BE PLACED WITHIN SURFACE WATERS OR STORMWATER CONVEYANCES. CONTRACTOR SHALL INSTALL SILT FENCE PROTECTION AROUND THE LIMITS OF ALL TEMPORARY SOIL STOCKPILE AREAS. ALL SOIL STOCKPILES THAT REMAIN UNDISTURBED FOR A PERIOD GREATER THAN ONE MONTH SHALL BE PROTECTED WITH COVER OF MULCH, EROSION CONTROL MATS, OR PLASTIC SHEETING.
   - E. IMPLEMENT MEASURES TO CONTROL VEHICLE TRACKING OFF SITE.
   - F. KEEP EXISTING PAVED SURFACES CLEAN OF SEDIMENT. STREETS LEADING TO AND FROM THE CONSTRUCTION ENTRANCE SHALL BE CHECKED DAILY FOR EVIDENCE OF OFF-SITE SEDIMENT TRACKING ONTO PAVED SURFACES. THESE AREAS WILL BE SWEPT CLEAN OF ANY TRACKED MATERIALS AS SOON AS POSSIBLE AND WITHIN 24 HOURS OF DISCOVERY. EXTEND SWEEPING TO THE EXTREMITY OF ANY SEDIMENT TRACKING THAT OCCURS OFF SITE.
3. DEWATERING AND BASIN DRAINING
   - A. CONTRACTOR IS RESPONSIBLE FOR ALL CONTROL OF WATER AND DEWATERING.
   - B. DEWATERING ACTIVITIES THAT HAVE SEDIMENT-LADEN DISCHARGE MUST DISCHARGE INTO A TEMPORARY OR PERMANENT SEDIMENTATION BASIN WHEN POSSIBLE, OTHERWISE IT MUST BE DISCHARGED THROUGH SOME FORM OF BEST MANAGEMENT PRACTICE (BMP) TO LIMIT SEDIMENT FROM LEAVING THE SITE. PRIOR TO DISCHARGE, PERFORM A VISUAL TEST TO ENSURE ADEQUATE TREATMENT IS OBTAINED IN THE BASIN OR BMP AND APPLY ADDITIONAL TREATMENT AS REQUIRED TO ENSURE ADEQUATE TREATMENT. THE DISCHARGE MUST BE DISPERSED OVER AN ACCEPTED ENERGY DISSIPATION MEASURE AND NOT ADVERSELY AFFECT THE RECEIVING WATER OR DOWNSTREAM LANDOWNERS OR WETLANDS.
4. INSPECTIONS AND MAINTENANCE
   - A. WHEN INSPECTIONS FIND EROSION PREVENTION AND SEDIMENT CONTROL BMP'S THAT ARE NONFUNCTIONAL, ALL NONFUNCTIONAL BMP'S MUST BE REPAIRED, REPLACED OR SUPPLEMENTED WITH FUNCTIONAL BMP'S WITHIN 24 HOURS AFTER DISCOVERY.
   - B. ROUTINELY INSPECT THE SITE ONCE EVERY 7 DAYS DURING ACTIVE CONSTRUCTION AND WITHIN 24 HOURS AFTER A RAINFALL EVENT GREATER THAN 0.5 INCHES IN 24 HOURS.
   - C. ALL SEDIMENT DEPOSITS WITHIN SURFACE WATERS OR STORMWATER CONVEYANCES MUST BE REMOVED AND RESTABILIZED WITHIN 7 DAYS OF DISCOVERY, INCLUDING DELTAS AND STORM SEWER SEDIMENT DEPOSITS. THE CONTRACTOR SHALL BE RESPONSIBLE FOR OBTAINING ALL PERMITS REQUIRED, IF NECESSARY, FOR SUCH SEDIMENT REMOVAL.
   - D. INSPECTIONS CAN BE SUSPENDED DUE TO FROZEN GROUND CONDITIONS UNTIL FIRST RUNOFF OCCURS OR CONSTRUCTION ACTIVITIES RESUME.
5. POLLUTION PREVENTION MEASURES
   - A. SOLID WASTE: COLLECTED SEDIMENT, ASPHALT, CONCRETE MILLINGS, FLOATING DEBRIS, PAPER, PLASTIC, FABRIC, CONSTRUCTION AND DEMOLITION DEBRIS AND OTHER WASTES MUST BE DISPOSED OF PROPERLY AND MUST COMPLY WITH MPCA DISPOSAL REQUIREMENTS.
   - B. HAZARDOUS MATERIALS: OIL, GASOLINE, PAINT AND ANY HAZARDOUS SUBSTANCES MUST BE STORED IN APPROPRIATE CONTAINERS, INCLUDING SECONDARY CONTAINMENT TO PREVENT SPILLS, LEAKS OR OTHER DISCHARGES. RESTRICTED ACCESS TO STORAGE AREAS MUST BE PROVIDED TO PREVENT VANDALISM. STORAGE AND DISPOSAL OF HAZARDOUS WASTE MUST COMPLY WITH MPCA REGULATIONS.
   - C. A DEFINED AREA OF THE SITE MUST BE DESIGNATED FOR USE AS A WASH AREA FOR TRUCKS AND OTHER EQUIPMENT. NO ENGINE DEGREASING ALLOWED ON SITE.
   - D. CONCRETE WASHOUT CONTAINMENT SHALL BE PROVIDED ON SITE. THE CONTAINMENT METHOD MUST BE LEAK-PROOF WITH AN IMPERMEABLE LINER. OR ALTERNATIVELY, CONCRETE WASHOUT SHALL BE PERFORMED AT THE CONCRETE MIX PLANT INSTEAD OF ON-SITE.

90% DRAFT
NOT FOR CONSTRUCTION

I HEREBY CERTIFY THAT THIS PLAN, SPECIFICATION, OR REPORT WAS PREPARED BY ME OR UNDER MY DIRECT SUPERVISION AND THAT I AM A DULY LICENSED PROFESSIONAL ENGINEER UNDER THE LAWS OF THE STATE OF MINNESOTA.

PRINTED NAME _____

SIGNATURE _____

DATE ___-___-___ LICENSE # _____-_____

#	BY	CHK	APP	DATE	RELEASE/REVISION DESCRIPTION
A	XXX	XXX	XXX	XX/XX/XXXX	DESCRIPTION

BARR ENGINEERING CO.
4300 MARKETPOINTE DRIVE
SUITE 200
MINNEAPOLIS, MN 55435

PH: 1-800-632-2277
WWW.BARR.COM
MINNESOTA ENGINEERING FIRM
NUMBER 10104111545

RWMWD
Ramsey-Washington Metro Watershed District

MAPLEWOOD TOYOTA RETROFIT
MAPLEWOOD, MINNESOTA
NOTES

BARR PROJECT # 2362117200
DWG # G002
REV # A

ORIGINAL DRAWING SIZE: ANSI FULL BLEED B (17.00 X 11.00 INCHES) PLOT SCALE: 1:2 PLOT DATE: 2/26/2025 8:41 AM
CADD USER: OWEN Q. RICHEY FILE: M:\DESIGN\2362\172.00_2025 RETROFIT SITES_MAPLEWOOD TOYOTA\2362117200_G002.DWG

TOPOGRAPHICAL SURVEY FOR:
BARR ENGINEERING

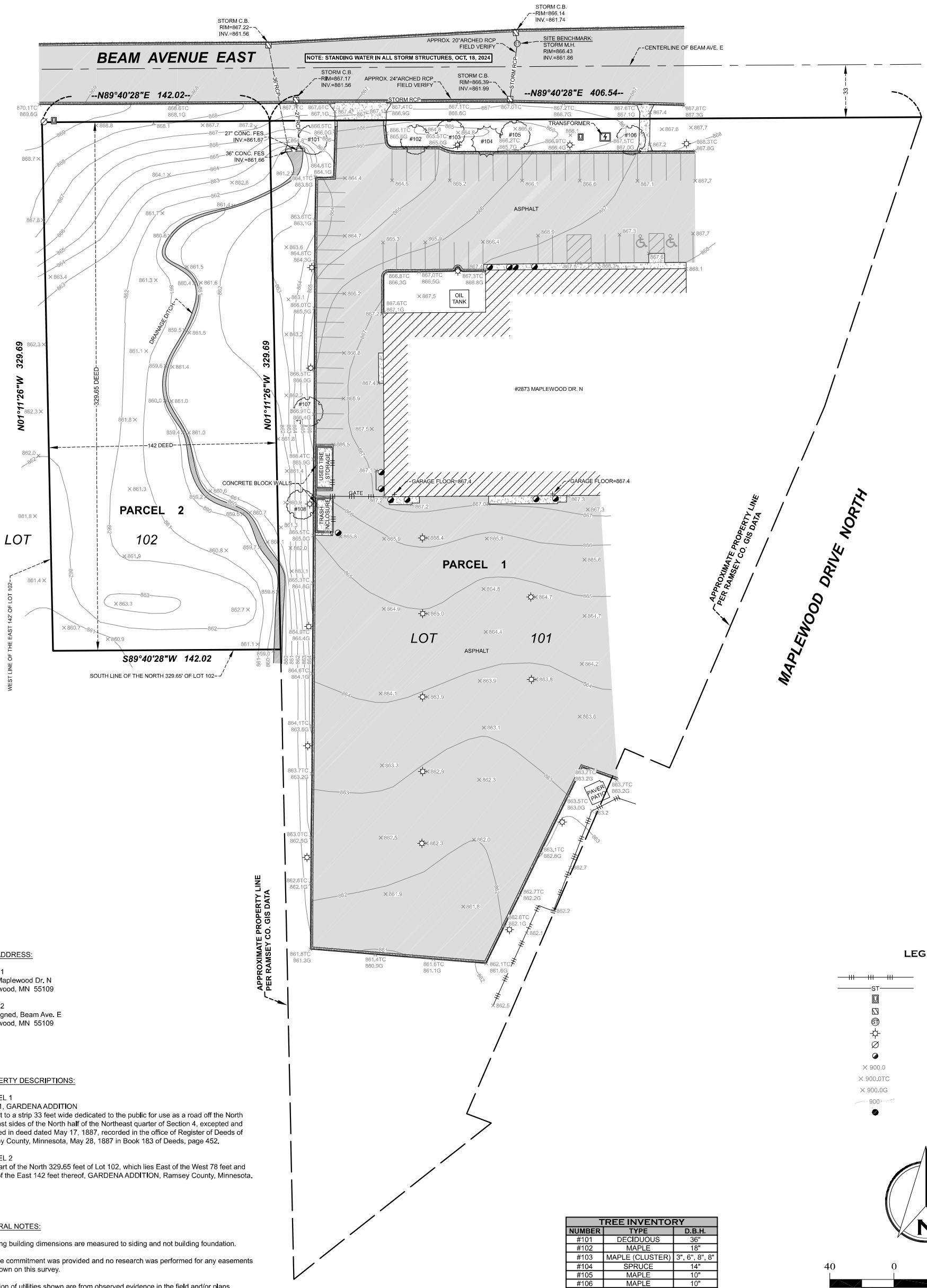

SITE ADDRESS:

Parcel 1
2873 Maplewood Dr. N
Maplewood, MN 55109

Parcel 2
Unassigned, Beam Ave. E
Maplewood, MN 55109

PROPERTY DESCRIPTIONS:

PARCEL 1
Lot 101, GARDENA ADDITION
Subject to a strip 33 feet wide dedicated to the public for use as a road off the North and East sides of the North half of the Northeast quarter of Section 4, excepted and reserved in deed dated May 17, 1887, recorded in the office of Register of Deeds of Ramsey County, Minnesota, May 28, 1887 in Book 183 of Deeds, page 452.

PARCEL 2
That part of the North 329.65 feet of Lot 102, which lies East of the West 78 feet and West of the East 142 feet thereof, GARDENA ADDITION, Ramsey County, Minnesota.

GENERAL NOTES:

· Existing building dimensions are measured to siding and not building foundation.

· No title commitment was provided and no research was performed for any easements not shown on this survey.

· Location of utilities shown are from observed evidence in the field and/or plans furnished by others and are considered approximate. Gopher State One Call or a private utility locator should be contacted to locate utilities on site before excavation.

TREE INVENTORY		
NUMBER	TYPE	D.B.H.
#101	DECIDUOUS	36"
#102	MAPLE	18"
#103	MAPLE (CLUSTER)	3", 6", 8", 8"
#104	SPRUCE	14"
#105	MAPLE	10"
#106	MAPLE	10"
#107	DECIDUOUS	34"
#108	DECIDUOUS	18"

LEGEND

- Fence
- Storm Sewer
- Utility Pedestal
- Storm Catch Basin
- Storm Manhole
- Light Pole
- Power Pole
- Guard Post
- 900.0 Existing Elevation
- 900.0TC Top of Curb Elevation
- 900.0G Gutter Elevation
- 900 Existing Contour
- Found Iron Monument

N

40 0 40 80
SCALE IN FEET

JOB NO. 405-24	SCALE 1" = 40'	SITE BENCHMARK: Storm manhole rim in roadway of Beam Street E at 2873 Maplewood Dr. N. Elevation = 866.43.	I hereby certify that this survey, plan, or report was prepared by me or under my direct supervision and that I am a duly registered Land Surveyor under the laws of the State of Minnesota.
BOOK/PAGE	DRAWN CME		W. BROWN LAND SURVEYING, INC.
	REFERENCE		DATED: 10-22-2024
SHEET 1 of 1 18x24			WOODROW A. BROWN, R.L.S. MN REG 15230

W. BROWN LAND SURVEYING, INC.
8030 OLD CEDAR AVENUE SO., SUITE 228
BLOOMINGTON, MN 55425
PH: (952) 854-4055
WBROWNLANDSURVEYING.COM
EMAIL: INFO@WBROWNLANDSURVEYING.COM

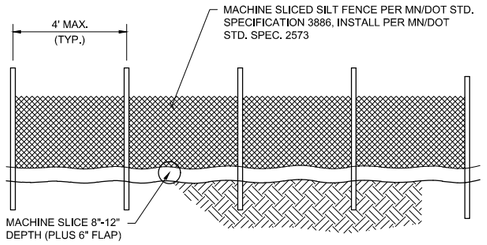

DOWNSTREAM VIEW

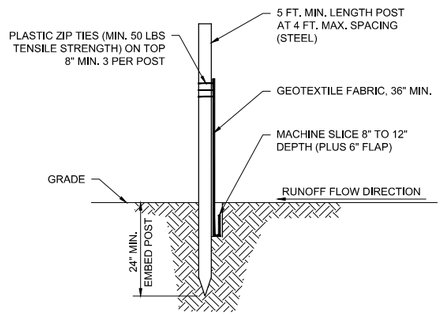

SECTION VIEW

NOTES:

1. SILT FENCE MATERIALS AND INSTALLATION SHALL MEET THE REQUIREMENTS OF MN/DOT SPECIFICATIONS 2573 AND 3886.
2. NO HOLES OR GAPS SHALL BE PRESENT IN/UNDER SILT FENCE. PREPARE AREA AS NEEDED TO SMOOTH SURFACE OR REMOVE DEBRIS.
3. REMOVE ACCUMULATED SEDIMENT WHEN BUILD UP REACHES 1/3 OF FENCE HEIGHT OR INSTALL A SECOND SILT FENCE DOWNSTREAM OF THE ORIGINAL FENCE AT A SUITABLE DISTANCE.
4. WHEN SPLICES ARE NECESSARY MAKE SPLICE AT POST ACCORDING TO SPLICE DETAIL. PLACE THE END POST OF THE SECOND FENCE INSIDE THE END POST OF THE FIRST FENCE. ROTATE BOTH POSTS TOGETHER AT LEAST 180 DEGREES TO CREATE A TIGHT SEAL WITH THE FABRIC MATERIAL, CUT THE FABRIC NEAR THE BOTTOM OF THE POSTS TO ACCOMMODATE THE 6 INCH FLAP, THEN DRIVE BOTH POSTS AND BURY THE FLAP AND COMPACT BACKFILL.

1 - DETAIL: SILT FENCE - MACHINE SLICED
NOT TO SCALE

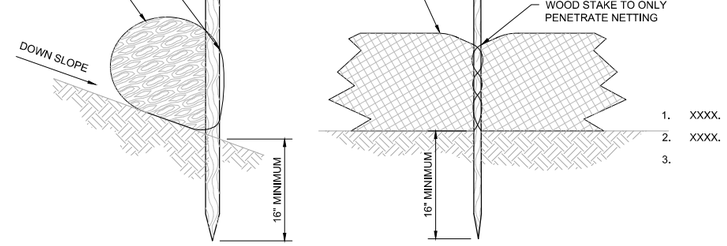

2 - DETAIL: SEDIMENT CONTROL LOG
NOT TO SCALE

NOTES:

1. SEDIMENT CONTROL LOG MATERIALS AND INSTALLATION SHALL MEET THE REQUIREMENTS OF MN/DOT SPECIFICATIONS 2573 AND 3897.
2. REMOVE ACCUMULATED SEDIMENT WHEN BUILD UP REACHES 1/3 OF LOG HEIGHT.

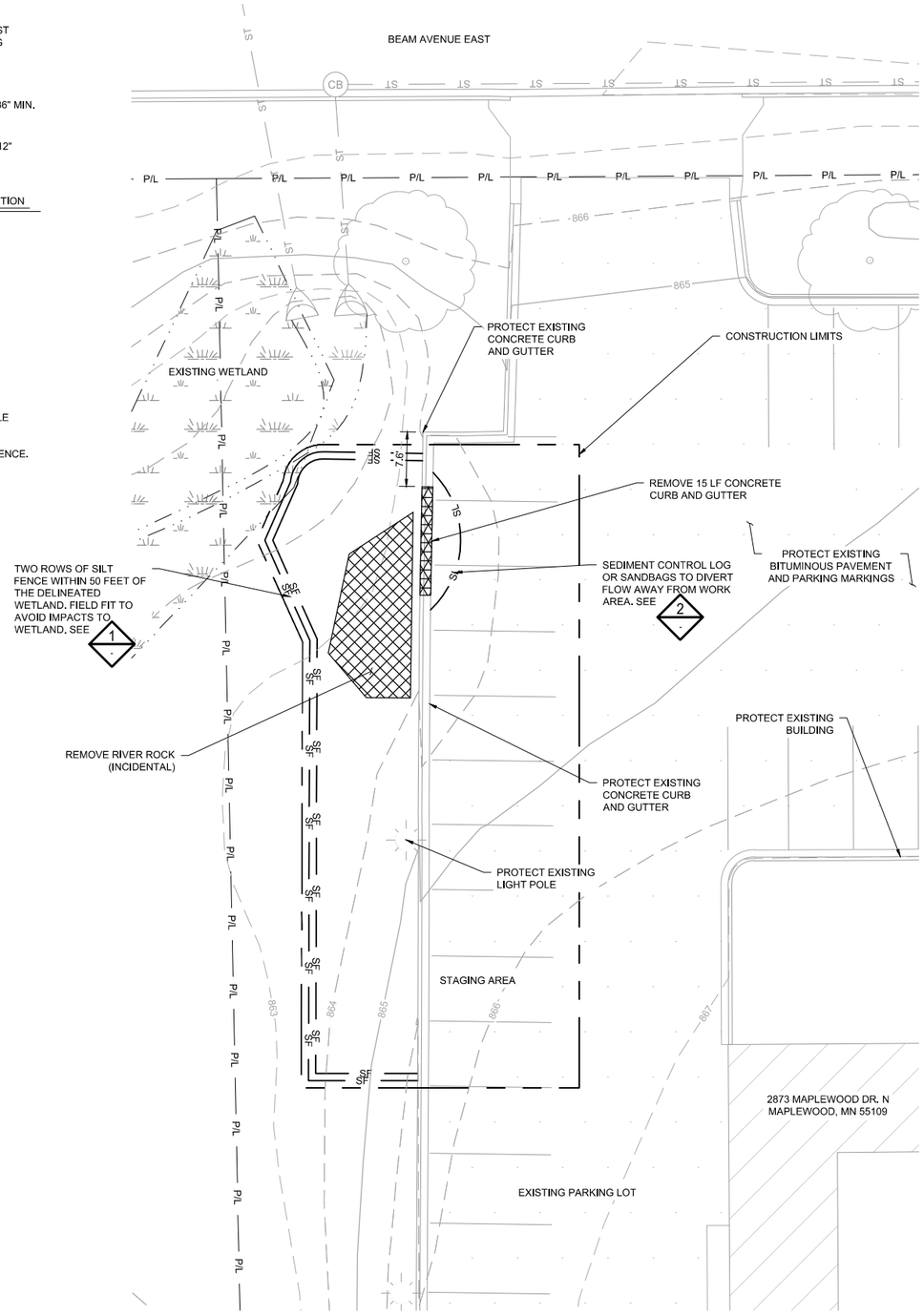

3 - PLAN: REMOVALS AND EROSION CONTROL

0 10 20
SCALE IN FEET

N

LEGEND:

- 865 — EXISTING MAJOR CONTOUR
- 864 — EXISTING MINOR CONTOUR
- P/L — PROPERTY LINE
- EXISTING CURB AND GUTTER
- X — EXISTING FENCE
- ST — EXISTING STORM SEWER
- EXISTING BUILDING
- EXISTING WETLAND
- CB — EXISTING CATCH BASIN
- EXISTING LIGHT POLE
- EXISTING TREE
- CONSTRUCTION LIMITS
- SL — SEDIMENT CONTROL LOG
- SF — SILT FENCE
- RIVER ROCK REMOVALS
- CURB AND GUTTER REMOVALS

NOTES:

SEE SHEET G002

90% DRAFT
NOT FOR CONSTRUCTION

I HEREBY CERTIFY THAT THIS PLAN, SPECIFICATION, OR REPORT WAS PREPARED BY ME OR UNDER MY DIRECT SUPERVISION AND THAT I AM A DULY LICENSED PROFESSIONAL ENGINEER UNDER THE LAWS OF THE STATE OF MINNESOTA.

PRINTED NAME -

SIGNATURE

DATE - LICENSE # -

#	BY	CHK	APP	DATE	RELEASE/REVISION DESCRIPTION
A	XXX	XXX	XXX	XX/XX/XXXX	DESCRIPTION

BARR ENGINEERING CO.
4300 MARKETPOINTE DRIVE
SUITE 200
MINNEAPOLIS, MN 55435

PH: 1-800-632-2277
WWW.BARR.COM
MINNESOTA ENGINEERING FIRM
NUMBER 10104111545

RWMWD
Ramsey-Washington Metro Watershed District

MAPLEWOOD TOYOTA RETROFIT
MAPLEWOOD, MINNESOTA
REMOVALS & EROSION CONTROL PLAN

BARR PROJECT # 2362117200
DWG # C001
REV # A

ORIGINAL DRAWING SIZE: ANSI FULL BLEED B (17.00 X 11.00 INCHES) PLOT SCALE: 1:2 PLOT DATE: 2/24/2025 2:26 PM
CADD USER: OWEN Q. RICHEY FILE: M:\DESIGN\2362\117200_2025 RETROFIT SITES_MAPLEWOOD TOYOTA\2362117200_C001.DWG

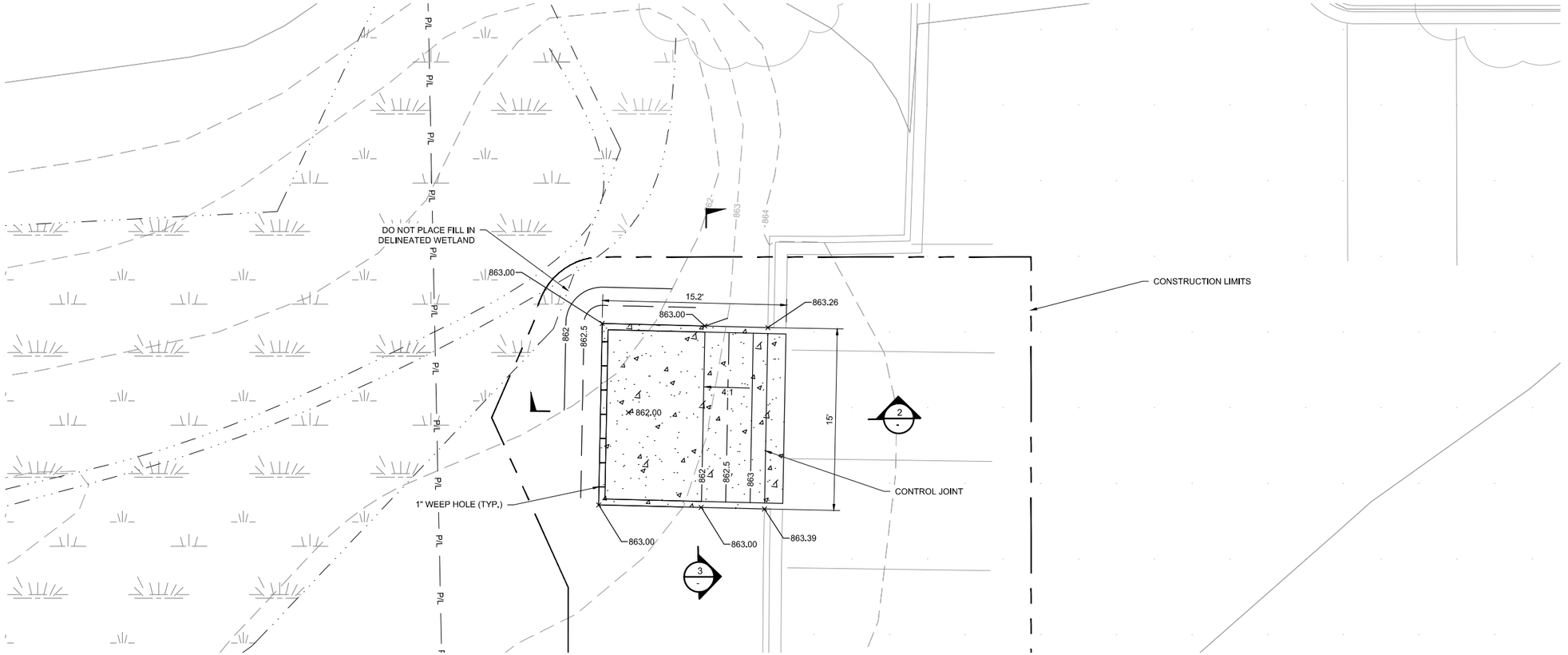

1 - PLAN: CAST-IN-PLACE CONCRETE FOREBAY STRUCTURE

0 5 10 SCALE IN FEET

N

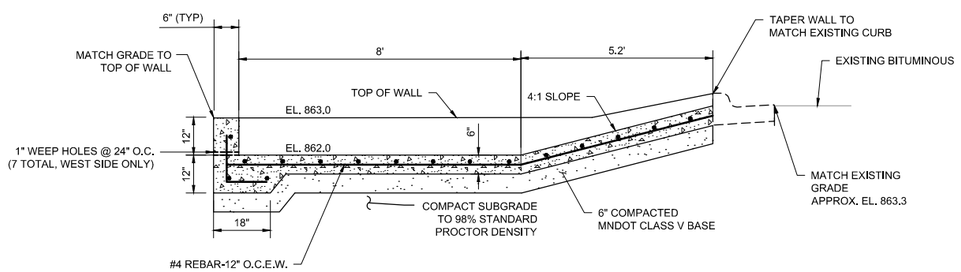

2 - SECTION: CAST-IN-PLACE CONCRETE FOREBAY STRUCTURE

0 1 2 3 4 SCALE IN FEET

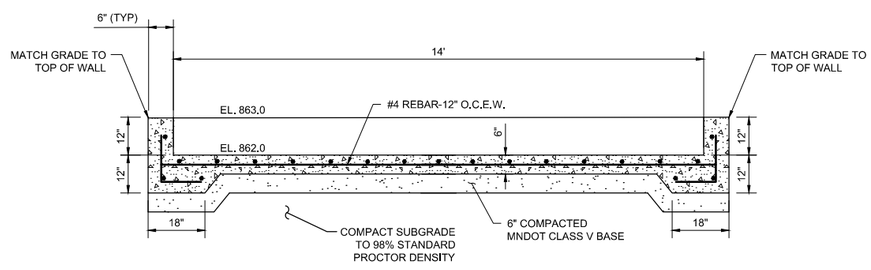

3 - SECTION: CAST-IN-PLACE CONCRETE FOREBAY STRUCTURE

0 1 2 3 4 SCALE IN FEET

LEGEND:

- 865 — EXISTING MAJOR CONTOUR
- 864 — EXISTING MINOR CONTOUR
- P/L — PROPERTY LINE
- EXISTING CURB AND GUTTER
- X — EXISTING FENCE
- ST — EXISTING STORM SEWER
- EXISTING BUILDING
- EXISTING WETLAND
- CB — EXISTING CATCH BASIN
- EXISTING LIGHT POLE
- EXISTING TREE
- CONSTRUCTION LIMITS
- 865 — PROPOSED MAJOR CONTOUR
- 864 — PROPOSED MINOR CONTOUR

NOTES:

SEE SHEET G002.

90% DRAFT
NOT FOR CONSTRUCTION

I HEREBY CERTIFY THAT THIS PLAN, SPECIFICATION, OR REPORT WAS PREPARED BY ME OR UNDER MY DIRECT SUPERVISION AND THAT I AM A DULY LICENSED PROFESSIONAL ENGINEER UNDER THE LAWS OF THE STATE OF MINNESOTA.

PRINTED NAME -

SIGNATURE

DATE - LICENSE # -

#	BY	CHK	APP	DATE	RELEASE/REVISION DESCRIPTION
A	XXX	XXX	XXX	XX/XX/XXXX	DESCRIPTION

BARR ENGINEERING CO.
4300 MARKETPOINTE DRIVE
SUITE 200
MINNEAPOLIS, MN 55435

PH: 1-800-632-2277
WWW.BARR.COM
MINNESOTA ENGINEERING FIRM
NUMBER 10104111545

RWMWD
Ramsey-Washington Metro Watershed District

MAPLEWOOD TOYOTA RETROFIT
MAPLEWOOD, MINNESOTA
CAST-IN-PLACE CONCRETE FOREBAY STRUCTURE

BARR PROJECT # 2362117200
DWG # C002
REV # A

ORIGINAL DRAWING SIZE: ANSI FULL BLEED B (17.00 X 11.00 INCHES) IN LOT SCALE: 1:1 PLOT DATE: 2/24/2025 2:29 PM
CADD USER: OWEN G. RICHEY FILE: M:\DESIGN\2362\117200_2025 RETROFIT SITES_MAPLEWOOD TOYOTA\2362117200_C002.DWG

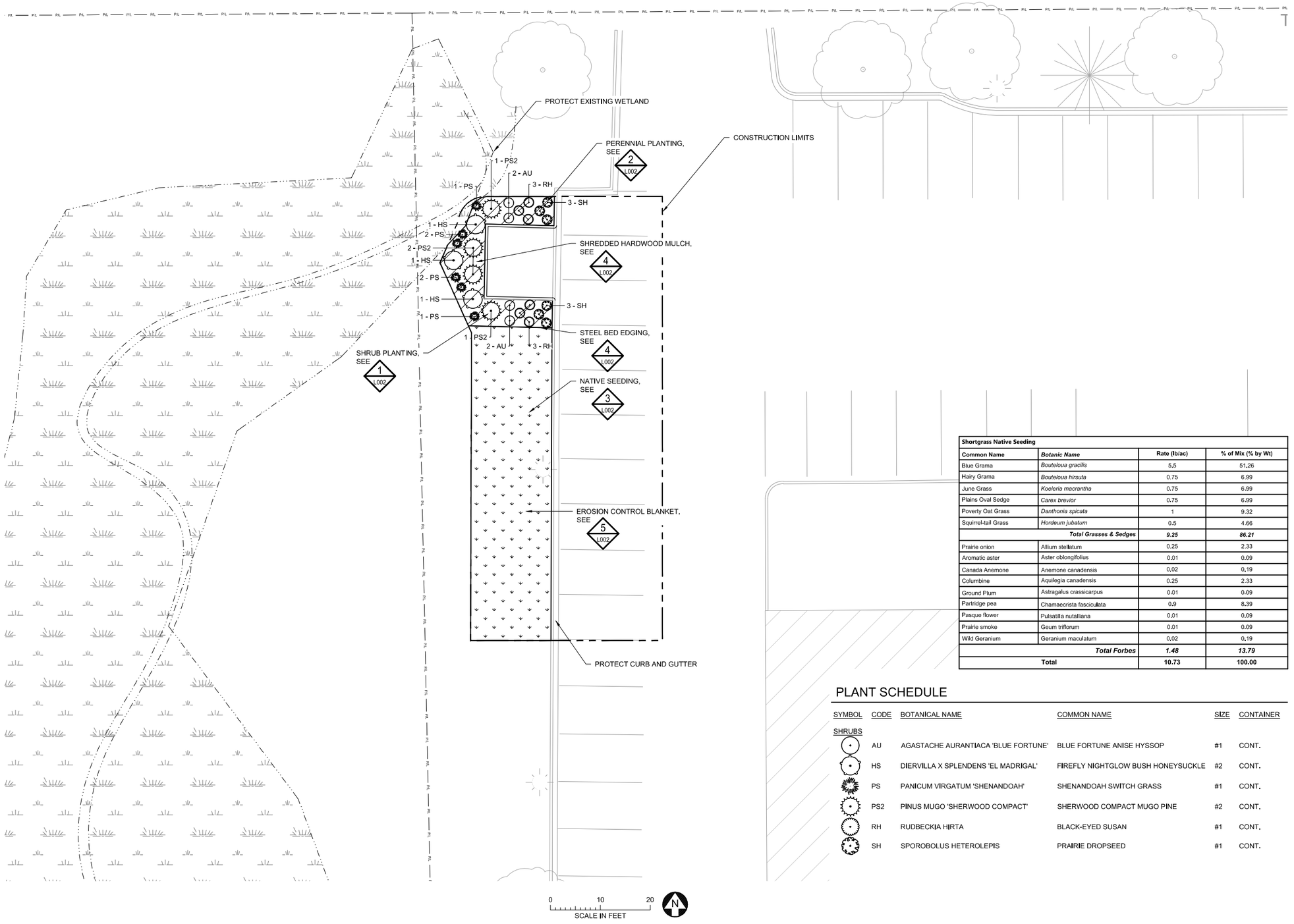

Shortgrass Native Seeding			
Common Name	***Botanic Name***	**Rate (lb/ac)**	**% of Mix (% by Wt)**
Blue Grama	*Bouteloua gracilis*	5.5	51.26
Hairy Grama	*Bouteloua hirsuta*	0.75	6.99
June Grass	*Koeleria macrantha*	0.75	6.99
Plains Oval Sedge	*Carex brevior*	0.75	6.99
Poverty Oat Grass	*Danthonia spicata*	1	9.32
Squirrel-tail Grass	*Hordeum jubatum*	0.5	4.66
	Total Grasses & Sedges	***9.25***	***86.21***
Prairie onion	Allium stellatum	0.25	2.33
Aromatic aster	Aster oblongifolius	0.01	0.09
Canada Anemone	Anemone canadensis	0.02	0.19
Columbine	Aquilegia canadensis	0.25	2.33
Ground Plum	Astragalus crassicarpus	0.01	0.09
Partridge pea	Chamaecrista fasciculata	0.9	8.39
Pasque flower	Pulsatilla nutalliana	0.01	0.09
Prairie smoke	Geum triflorum	0.01	0.09
Wild Geranium	Geranium maculatum	0.02	0.19
	Total Forbes	***1.48***	***13.79***
	Total	**10.73**	**100.00**

PLANT SCHEDULE

SYMBOL	CODE	BOTANICAL NAME	COMMON NAME	SIZE	CONTAINER
SHRUBS					
	AU	AGASTACHE AURANTIACA 'BLUE FORTUNE'	BLUE FORTUNE ANISE HYSSOP	#1	CONT.
	HS	DIERVILLA X SPLENDENS 'EL MADRIGAL'	FIREFLY NIGHTGLOW BUSH HONEYSUCKLE	#2	CONT.
	PS	PANICUM VIRGATUM 'SHENANDOAH'	SHENANDOAH SWITCH GRASS	#1	CONT.
	PS2	PINUS MUGO 'SHERWOOD COMPACT'	SHERWOOD COMPACT MUGO PINE	#2	CONT.
	RH	RUDBECKIA HIRTA	BLACK-EYED SUSAN	#1	CONT.
	SH	SPOROBOLUS HETEROLEPIS	PRAIRIE DROPSEED	#1	CONT.

LEGEND:

LEGEND - EXISTING - SITE

- PROPERTY LINE
- 1380 EXISTING MAJOR CONTOUR
- 1379 EXISTING MINOR CONTOUR
- EXISTING CURB AND GUTTER
- EXISTING WETLAND
- EXISTING LIGHT POLE
- EXISTING DECIDUOUS TREE TO REMAIN
- EXISTING CONIFEROUS TREE TO REMAIN
- CB EXISTING CATCH BASIN

LEGEND - PROPOSED - SITE

- PROPOSED CONSTRUCTION LIMITS
- PROPOSED LOW MAINTENANCE TURF SEED MIX - 0.02 AC
- PROPOSED SHREDDED HARDWOOD MULCH

NOTES:

1. SEE SHEET L002 FOR PLANTING NOTES.
2. SEE SHEET L002 FOR SEEDING NOTES.
3. SEE SHEET GOO2 FOR LANDSCAPE SPECIFICATIONS.

90% DRAFT
NOT FOR CONSTRUCTION

I HEREBY CERTIFY THAT THIS PLAN, SPECIFICATION, OR REPORT WAS PREPARED BY ME OR UNDER MY DIRECT SUPERVISION AND THAT I AM A DULY LICENSED PROFESSIONAL ENGINEER UNDER THE LAWS OF THE STATE OF MINNESOTA.

PRINTED NAME _____

SIGNATURE _____

DATE ___-___-___ LICENSE # ___-___-___

#	BY	CHK	APP	DATE	RELEASE/REVISION DESCRIPTION
A	XXX	XXX	XXX	XX/XX/XXXX	DESCRIPTION

BARR ENGINEERING CO.
4300 MARKETPOINTE DRIVE
SUITE 200
MINNEAPOLIS, MN 55435

PH: 1-800-632-2277
WWW.BARR.COM
MINNESOTA ENGINEERING FIRM
NUMBER 10104111545

RWMWD
Ramsey-Washington Metro Watershed District

MAPLEWOOD TOYOTA RETROFIT
MAPLEWOOD, MINNESOTA
LANDSCAPE PLAN

BARR PROJECT # 2362117200
DWG # L001
REV # A

ORIGINAL DRAWING SIZE: ANSI FULL BLEED B (17.00 X 11.00 INCHES) PLOT SCALE: 1:2 PLOT DATE: 2/5/2026 11:48 AM
CADD USER: ELLI B_ZAKOWSKI FILE: M:\DESIGN\2362117200_2025 RETROFIT SITES_MAPLEWOOD TOYOTA\2362117200_L001.DWG

NOTES:
1. EXCAVATE SOIL AS REQUIRED. REFER TO TREE PLANTING HOLE DIMENSION REFERENCE TABLE. PREPARE PLANTING SOIL PER PLAN AND AS SPECIFIED.
2. SCARIFY BOTTOM AND SIDES OF HOLE PRIOR TO PLANTING.
3. PREPARE PLANTING SOIL AS SPECIFIED. SOIL MUST BE PRE-MIXED OR MIXED TO A UNIFORM TEXTURE ON SITE PRIOR TO PLACEMENT.
4. REMOVE AND DISPOSE OF THE ROOT PACKAGING MATERIAL AS NOTED AND PERFORM ANY CORRECTIVE PRUNING OF TOP AND ROOTS AS SPECIFIED TO PREPARE THE SHRUB FOR PLANTING.
5. SET SHRUB ON IN SITU SOIL OR THOROUGHLY-COMPACTED BACKFILL AND PLUMB.
6. BACKFILL AROUND PREPARED ROOT PACKAGE WITH PLANTING SOIL WITH 6" MAX. LIFTS. GENTLY FIRM SOIL AROUND THE ROOT MASS WITH EACH LIFT TO MAINTAIN PLUMB.
7. WATER THOROUGHLY WITHIN 2 HOURS AFTER PLANTING TO FILL VOIDS. BACKFILL ANY VOIDS CREATED DURING INITIAL WATERING AND RE-WATER.
8. APPLY MULCH OVER SOIL SURFACE AT THE BASE OF THE SHRUB IMMEDIATELY AFTER PLANTING. ENSURE NO MULCH IS IN CONTACT WITH THE BASE OF SHRUB AT FINISHED GRADE.
9. MAINTAIN SHRUB IN A PLUMB POSITION THROUGHOUT THE INITIAL ESTABLISHMENT PERIOD.

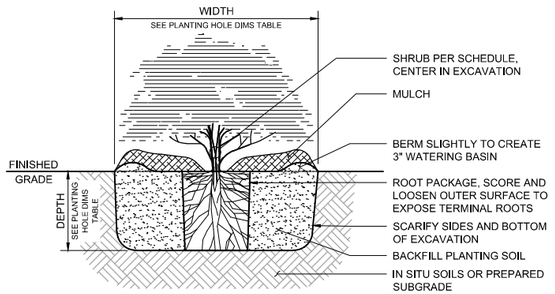

1 - DETAIL: SHRUB PLANTING
NOT TO SCALE

NOTES:
1. EXCAVATE SOIL AS REQUIRED. REFER TO TREE PLANTING HOLE DIMENSION REFERENCE TABLE. PREPARE PLANTING SOIL PER PLAN AND AS SPECIFIED.
2. SCARIFY BOTTOM AND SIDES OF HOLE PRIOR TO PLANTING.
3. PREPARE PLANTING SOIL AS SPECIFIED. SOIL MUST BE PRE-MIXED OR MIXED TO A UNIFORM TEXTURE ON SITE PRIOR TO PLACEMENT.
4. REMOVE AND DISPOSE OF THE ROOT PACKAGING MATERIAL AS NOTED AND PERFORM ANY CORRECTIVE PRUNING OF TOP AND ROOTS AS SPECIFIED TO PREPARE THE PLANT FOR PLANTING.
5. SET PLANT ON IN SITU SOIL OR THOROUGHLY-COMPACTED BACKFILL AND PLUMB.
6. BACKFILL AROUND PREPARED ROOT PACKAGE WITH PLANTING SOIL WITH 6" MAX. LIFTS. GENTLY FIRM SOIL AROUND THE ROOT MASS WITH EACH LIFT TO MAINTAIN PLUMB.
7. WATER THOROUGHLY WITHIN 2 HOURS AFTER PLANTING TO FILL VOIDS. BACKFILL ANY VOIDS CREATED DURING INITIAL WATERING AND RE-WATER.
8. APPLY MULCH OVER SOIL SURFACE AT THE BASE OF THE PLANT IMMEDIATELY AFTER PLANTING. ENSURE NO MULCH IS IN CONTACT WITH THE BASE OF PLANT AT FINISHED GRADE.
9. MAINTAIN PLANT IN A PLUMB POSITION THROUGHOUT THE INITIAL ESTABLISHMENT PERIOD.

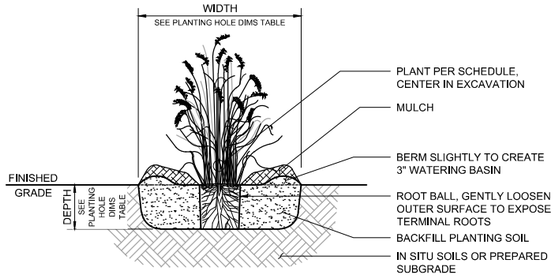

2 - DETAIL: PERENNIAL PLANTING
NOT TO SCALE

NOTES:
1. PREPARE SOIL PER PLAN AND AS SPECIFIED.
2. PROVIDE SEEDING FOR ALL AREAS NOTED ON THE DRAWINGS.
3. PROVIDE SEEDING FOR ALL ADDITIONAL DISTURBED AREAS ON- AND OFF-SITE AS NOTED ON THE DRAWINGS.

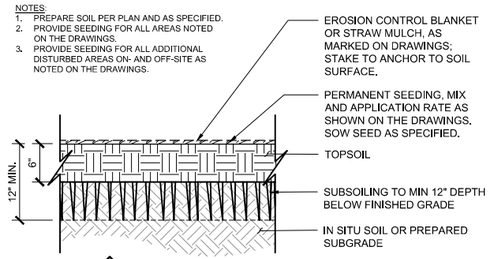

3 - DETAIL: PERMANENT SEEDING
NOT TO SCALE

NOTES:
1. PREPARE SOIL PER PLAN AND AS SPECIFIED. MIX AND COMPACTION TOLERANCES PER PROJECT SPECIFICATIONS.
2. FURNISH LANDSCAPE BED EDGE RESTRAINT TYPE, COLOR, AND APPURTENANCES PER PROJECT SPECIFICATIONS.
3. EDGE RESTRAINT SHALL NOT BE INSTALLED ADJACENT TO CONCRETE WALKS, BUILDING FOUNDATIONS, OR OTHER HARDSCAPE SURFACING.
4. EDGE RESTRAINT SHALL BE INSTALLED AT PLANTING BEDS ADJACENT TO SODDED OR SEEDED TURFGRASS AREAS OR OTHER NATURAL OR MULCHED SURFACES.
5. PROVIDE MULCH AS SPECIFIED. ENSURE MULCH IS CERTIFIED TO BE WEED SEED FREE AND IS NOT CONTAMINATED WITH SOILS OR PESTS.
6. MULCH CONTAMINATED WITH SOIL MUST BE REMOVED AND REPLACED.

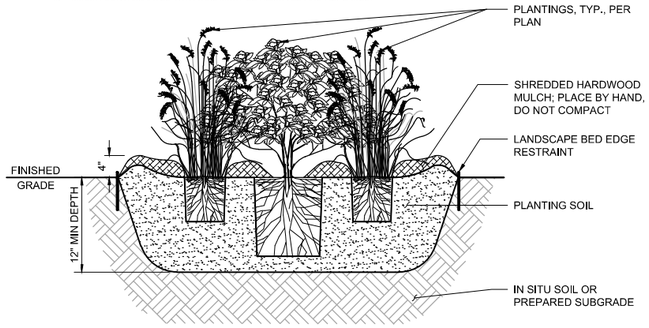

4 - DETAIL: MULCHED PLANTING BEDS
NOT TO SCALE

SLOPE INSTALLATION

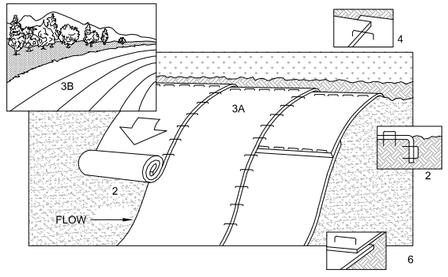

NOTES:
1. REFER TO MANUFACTURER RECOMMENDATIONS FOR STAPLE PATTERNS FOR SLOPE INSTALLATIONS.
2. PREPARE SOIL BY LOOSENING TOP 1-2 INCHES AND APPLY SEED (AND FERTILIZER WHERE REQUIRED) PRIOR TO INSTALLING BLANKETS. GROUND SHOULD BE SMOOTH AND FREE OF DEBRIS.
3. BEGIN (A) AT THE TOP OF THE SLOPE AND ROLL THE BLANKETS DOWN OR (B) AT ONE END OF THE SLOPE AND ROLL THE BLANKETS HORIZONTALLY ACROSS THE SLOPE.
4. THE EDGES OF PARALLEL BLANKETS MUST BE STAPLED WITH APPROXIMATELY 6" OVERLAP. WITH THE UPHILL BLANKET ON TOP.
5. WHEN BLANKETS MUST BE SPLICED DOWN THE SLOPE, PLACE BLANKETS END OVER END (SHINGLE STYLE) WITH APPROXIMATELY 6" OVERLAP. STAPLE THROUGH OVERLAPPED AREA, APPROXIMATELY 12" APART.
6. BLANKET MATERIALS SHALL BE AS SPECIFIED OR AS APPROVED BY ENGINEER.

5 - DETAIL: EROSION CONTROL BLANKET - INSTALLATION
NOT TO SCALE

PLANTING NOTES:
1. PLANTING SHALL CONFORM TO MNDOT SPEC 2571, PLANT INSTALLATION AND ESTABLISHMENT, EXCEPT AS INDICATED OTHERWISE IN THE PLANTING SHEETS.
2. INFORM THE LANDSCAPE ARCHITECT OF PLANTING TWO DAYS PRIOR TO PLANT DELIVERY.
3. CONTRACTOR SHALL COORDINATE LAYOUT OF ALL PLANTS WITH DIRECTION OF LANDSCAPE ARCHITECT IN THE FIELD.
4. CONFIRM ALL QUANTITIES, SHAPES, AND LOCATIONS OF ALL PLANTING AREAS; ADJUST QUANTITIES AS REQUIRED TO CONFORM TO THE SITE CONDITIONS. CONFIRM ANY ADJUSTMENTS WITH THE LANDSCAPE ARCHITECT.
5. LOCATE ALL UTILITIES. NOTIFY THE LANDSCAPE ARCHITECT OF ANY CONFLICTS WITH PLANT INSTALLATION.
6. LONG-TERM STORAGE OF MATERIALS OR SUPPLIES ON-SITE WILL NOT BE ALLOWED. ANY PLANT STOCK NOT PLANTED ON DAY OF DELIVERY SHALL BE HEELED IN AND WATERED UNTIL INSTALLATION. PLANTS NOT MAINTAINED IN THIS MANNER WILL BE REJECTED.
7. THE PLAN TAKES PRECEDENCE OVER THE PLANT SCHEDULE IF DISCREPANCIES EXIST. ADVISE LANDSCAPE ARCHITECT OF ANY DISCREPANCIES.
8. THE CONTRACTOR SHALL AVOID DAMAGING EXISTING TREES. DO NOT STORE OR DRIVE HEAVY MATERIALS OVER TREE ROOTS. DO NOT DAMAGE TREE BARK OR BRANCHES.
9. THE CONTRACTOR SHALL KEEP PAVEMENTS, FIXTURES, AND BUILDINGS CLEAN AND UNSTAINED. ANY DAMAGE TO EXISTING FACILITIES SHALL BE REPAIRED AT THE CONTRACTOR'S EXPENSE. THE PROJECT SITE SHALL BE KEPT CLEAR OF CONSTRUCTION WASTES AND DEBRIS.
10. SOIL LOOSENING APPLIES TO ALL DISTURBED SOILS TO BE RE-VEGETATED, INCLUDING SEEDING/LANDSCAPE AREAS (NOT INCLUDING AREAS UNDER EXISTING TREE DRIP-LINES OR WITHIN 5-FEET OF BUILDING/PAVEMENT FOUNDATIONS), TO RESTORE SOIL PERMEABILITY.
11. SOIL REMEDIATION MUST BE IMPLEMENTED PRIOR TO ANY INSTALLATION OF TREES, SHRUBS, AND SEED. NO WHEELED EQUIPMENT SHALL BE USED ON LOOSENED SOIL - WIDE TRACK EQUIPMENT ONLY.
12. ALL DISTURBED AREAS TO BE RE-VEGETATED SHALL HAVE 12-INCH MINIMUM DEPTH OF SOIL LOOSENING.
13. LOOSENED SOILS SHALL HAVE A MAXIMUM OF 200 PSI IN TOP 12 INCHES.
14. MAINTENANCE SHALL BEGIN IMMEDIATELY AFTER EACH PORTION OF THE WORK IS IN PLACE. PLANT MATERIAL SHALL BE PROTECTED AND MAINTAINED UNTIL THE INSTALLATION OF PLANTINGS IS COMPLETE, INSPECTION HAS BEEN MADE, AND PLANTING IS ACCEPTED EXCLUSIVE OF THE GUARANTEE.
15. MAINTENANCE SHALL INCLUDE WATERING, WEEDING, MULCHING, REMOVAL OF DEAD MATERIAL PRIOR TO GROWING SEASON, RE-SETTING PLANTS AND PROPER GRADE, AND KEEPING PLANTS IN A PLUMB POSITION.
16. WATERING: MAINTAIN A WATERING SCHEDULE WHICH WILL THOROUGHLY WATER ALL PLANTS ONCE A WEEK. IN EXTREMELY HOT, DRY WEATHER, WATER MORE OFTEN AS REQUIRED BY INDICATIONS OF HEAT STRESS SUCH AS WILTING LEAVES. CHECK MOISTURE UNDER MULCH PRIOR TO WATERING TO DETERMINE NEED. CONTRACTOR SHALL MAKE THE NECESSARY ARRANGEMENTS FOR WATER.
17. REFER TO SPECIFICATIONS FOR ADDITIONAL INFORMATION. IN THE CASE OF ANY DISCREPANCIES BETWEEN THIS DETAIL, PLANS, OR SPECIFICATIONS, THE SPECIFICATIONS SHALL GOVERN.

SEEDING NOTES:
1. ANY EXOTIC INVASIVE PLANTS AND WEEDS WITHIN THE SEEDING AREAS SHALL BE SPRAYED WITH HERBICIDE 14 DAYS PRIOR TO SEEDING OR AS PER MANUFACTURE'S RECOMMENDATION. SIGNAGE INDICATING THE USE OF HERBICIDES MUST BE POSTED ON SITE.
2. ALL HERBICIDE APPLICATION SHALL BE APPLIED BY A LICENSED APPLICATOR WITHIN THE STATE OF MINNESOTA.
3. SEED IN ACCORDANCE WITH THE SPECIFICATIONS. SEEDING IS TO TAKE PLACE IMMEDIATELY FOLLOWING FINAL GRADING AND SOIL PLACEMENT TO PREVENT EROSION AND COMPACTION.
4. CONFIRM ALL QUANTITIES, SHAPES, AND LOCATIONS OF ALL SEEDING AREAS; ADJUST QUANTITIES AS REQUIRED TO CONFORM TO THE SITE CONDITIONS. CONFIRM ANY ADJUSTMENTS WITH THE LANDSCAPE ARCHITECT.
5. AFTER SEEDING, EROSION CONTROL BLANKET SHALL BE PLACED OVER ENTIRE SEEDING AREA.
6. REFER TO SPECIFICATIONS FOR ADDITIONAL INFORMATION. IN THE CASE OF ANY DISCREPANCIES BETWEEN THIS DETAIL, PLANS, OR SPECIFICATIONS, THE SPECIFICATIONS SHALL GOVERN.

90% DRAFT
NOT FOR CONSTRUCTION

I HEREBY CERTIFY THAT THIS PLAN, SPECIFICATION, OR REPORT WAS PREPARED BY ME OR UNDER MY DIRECT SUPERVISION AND THAT I AM A DULY LICENSED PROFESSIONAL ENGINEER UNDER THE LAWS OF THE STATE OF MINNESOTA.

PRINTED NAME _____
SIGNATURE _____
DATE __-__-____ LICENSE # _____-_____

#	BY	CHK	APP	DATE	RELEASE/REVISION DESCRIPTION
A	XXX	XXX	XXX	XX/XX/XXXX	DESCRIPTION

BARR ENGINEERING CO.
4300 MARKETPOINTE DRIVE
SUITE 200
MINNEAPOLIS, MN 55435
PH: 1-800-632-2277
WWW.BARR.COM
MINNESOTA ENGINEERING FIRM
NUMBER 10104111545

RWMWD
Ramsey-Washington Metro Watershed District

MAPLEWOOD TOYOTA RETROFIT
MAPLEWOOD, MINNESOTA
LANDSCAPE DETAILS

BARR PROJECT # 2362117200
DWG # L002
REV # A

ORIGINAL DRAWING SIZE: ANSI FULL BLEED B (17.00 X 11.00 INCHES) PLOT SCALE: 1:2 PLOT DATE: 2/24/2025 2:29 PM
CAD/ USER: OWEN Q. RICHEY FILE: M:\DESIGN\2362117200_2025 RETROFIT SITES_MAPLEWOOD TOYOTA\2362117200_L002.DWG

****

Administrator's Report

****

MEMO

TO: Board of Managers and Staff
FROM: Tina Carstens, Administrator
SUBJECT: February Administrator's Report
DATE: February 28, 2025

A. Meetings Attended

Tuesday, February 4	8:30 AM	MAWA Executive Meeting
Wednesday, February 5	6:30 PM	Board Meeting
Monday, February 10	11:00 AM	Watershed Week Plannng
	1:00 PM	Meet with CLFLWD re: district office building
Tuesday, February 11	10:00 AM	Staff Watershed Management Plan Workshop
	2:30 PM	MW Events-Education Committee
Wednesday, February 12	10:00 AM	BWSR Local Implementers Webinar
	11:00 AM	Management Plan Engagement Planning
Thursday, February 13	9:00 AM	Water Resources Conference Planning
Tuesday, February 18	10:00 AM	Water Resources Conference Subcommittee
	2:00 PM	Kohlman Lake Management
Friday, February 21	11:00 AM	DEIA Plan Meeting
Monday, February 24	5:00 PM	Board Watershed Management Plan Workshop
Tuesday, February 25	2:00 PM	New Board Member Orientation
Friday, February 28	9:00 AM	2025 Monitoring Planning Meeting

B. Upcoming Meetings and Dates

April Board Meeting	April 2, 2025
CAC Meeting	April 22, 2025
Metro Watershed In-Person Meeting	April 22, 2025
May Board Meeting	May 7, 2025
WaterFest	May 31, 2025
June Board Meeting	June 4, 2025
CAC Meeting	June 10, 2025
MW Summer Tour – Roseau River WD	June 24-26, 2025
July Board Meeting	July 9, 2025**

C. Staff Anniversaries

Each month, I like to thank all our employees for their time and service to the watershed on the anniversary of their hiring. The following staff have work anniversaries with the watershed in March. I appreciate them and the work that they do, and I want to thank them for their commitment to the district and our mission!

March 5	Paige Ahlborg	18 years
March 20	Joe Tillotson	2 years*

*Full-time anniversary but worked as an intern previously.

D. **Board Action Log and Updates**

The board action log is attached. I review this list monthly and add anything suggested in the previous meeting.

E. **Minnesota Watersheds Special Meeting**

A special meeting of the membership is planned to be held on Friday, March 21, 2025 starting at 10:30 AM at the Park Event Center in Waite Park, MN. I have attached the meeting packet for your information.

This meeting is being held to amend the Minnesota Watersheds bylaws to adjust the resolutions and legislative priorities process. To implement this new process for the 2026 legislative session, the timeline for the resolution process needs to start in the spring instead of the fall. A memo is included in the packet to explain the reasoning and the new method.

At the meeting on March 21st, at least 43 delegates must be present to take action on amending the bylaws. I will need to know at the meeting if any of you are available to attend the meeting on RWMWD's behalf. I will submit the delegates form to Minnesota Watersheds after our meeting.

RAMSEY-WASHINGTON
METRO WATERSHED DISTRICT

Board of Managers 2025 Action Log

March 5, 2025

Item	Anticipated Action Date	Means of Action	Completed
Shoreland Assessment Next Steps	WMP 2025	Board Discussion	
PFOS Update	WMP 2025	Presentation and Board Discussion	
Impervious Surface Reduction Planning	WMP 2025	Presentation and Discussion.	
Chloride Use Reduction/Low Salt Design/Calibration Techniques	WMP 2025	Presentation and Board Discussion	

(651) 792-7950
fax (651) 792-7951
office@rwmwd.org
rwmwd.org
2665 Noel Drive
Little Canada, MN 55117

Minnesota Watersheds
Special Meeting
Friday, March 21, 2025
Park Event Center
500 Division Street
Waite Park, Minnesota 56387

Member Meeting Materials

Enclosed are the following items:

1. Notice of Special Meeting
2. Delegate Appointment Form
3. Special Meeting Agenda
4. Memo regarding proposed changes to the resolutions and legislative priorities processes
5. Proposed Bylaws Changes

Please note that the Delegate Appointment Forms are REQUIRED. This is an in-person meeting. For the special meeting to be held, a quorum of 43 delegates MUST be present. Please return your Delegate Appointment Forms to Maddy Bohn at mnwatershed@gmail.com at your earliest convenience.

This packet has been distributed to administrators and managers via email. No paper copies of this packet will be sent via the U.S. Postal Service.

We are looking forward to seeing you at this special meeting of the membership!

PLEASE BRING THIS INFORMATION PACKET WITH YOU TO THE SPECIAL MEETING. EXTRA COPIES WILL NOT BE AVAILABLE ON SITE. THANK YOU!!

Minnesota Watersheds
2025 Special Meeting Notice

NOTICE IS HEREBY GIVEN that a Special Meeting of Minnesota Watersheds will be held at Park Event Center, Waite Park, Minnesota beginning at 10:30 a.m. on Friday, March 21, 2025 for the following purposes:

1. To consider and act upon proposed changes to the Resolutions and Legislative Priorities processes; and
2. To consider and act upon proposed Bylaws changes.

Sincerely,

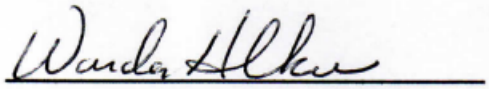

Wanda Holker
Secretary

Minnesota Watersheds
2025 Delegate Appointment Form

The _____ hereby certifies that it is
name of watershed organization
a watershed district or watershed management organization duly established and in good standing pursuant to Minnesota Statutes 103B or 103D and is a member of Minnesota Watersheds for the year 2025.

The _____ hereby further certifies
name of watershed organization
the following individuals have been appointed as delegates, or as an alternate delegate, all of whom are managers in good standing with their respective watershed district or watershed management organization.

Delegate #1: _____

Delegate #2: _____

Alternate: _____

Authorized by: _____
Signature **Date**

_____
Title

** Please return this form to mnwatershed@gmail.com at your earliest convenience. **

MINNESOTA WATERSHEDS
Connecting People. Protecting Water.

SPECIAL MEETING
Friday, March 21, 2025 | 10:30 a.m.
Park Event Center
500 Division Street
Waite Park, MN

AGENDA

GENERAL BUSINESS

10:30 a.m. Call to Order
10:31 a.m. Approval of Agenda (Action)
10:32 a.m. Overview of the Proposed Resolutions and Legislative Priorities Processes – Louis Smith

ACTION ITEMS

11:00 a.m. **BYLAWS HEARING** – Brad Kramer

WORKSHOP

11:30 a.m. **LATEST DEVELOPMENTS IN OPEN MEETING LAW AND DATA PRACTICES** – Louis Smith

1:00 p.m. **ADJOURNMENT**

Lunch will be provided.

TO: Minnesota Watersheds Board of Directors

FROM: Jan Voit, Executive Director
Louis Smith, Counsel

DATE: January 30, 2025

RE: Possible Changes to Minnesota Watersheds Resolutions Process

---

Introduction and Summary

As Minnesota Watersheds (MW) continues to evolve with its approach to impacting state policy and legislation, we have reviewed our current process and prepared recommendations of possible changes. This memorandum notes current challenges with the process and identifies ways to engage MW membership earlier in the calendar year in order for MW members, staff, and lobbyists to be more prepared for each legislative session. The proposed changes reflect input from the meeting of the combined Resolutions and Legislative Committees on January 16. Proposed amendments to the MW Bylaws and Manual of Policies and Procedures that reflect these possible changes are attached to this memo.

Current Process

MW has followed the same process to consider policy resolutions for decades. On or about October 1 of each year, member watershed organizations submit proposed resolutions for consideration. A Resolutions Committee meets to review each proposed resolution and make recommendations. These recommendations are reviewed by the MW Board of Directors and are distributed to the membership by the October 31 deadline identified in the bylaws. The MW membership votes on adoption of the proposed resolutions at its annual meeting.

In recent years, MW has also developed a Legislative Platform with the assistance of the Minnesota Association of Watershed Administrators (MAWA). The Legislative Platform is a general policy document that describes MW's position on key water resources policy issues and is reviewed and approved by the MW membership at its annual meeting.

MW has a Legislative Committee, with entirely different membership from the Resolutions Committee, which is charged with providing recommendations to the MW Board, staff, and lobbyists on legislative priorities. These priorities are informed by the resolutions adopted by the MW membership.

Issues with Current Process

Our discussions have identified the following issues with the current process:

1. Timing: It would greatly assist planning for the legislative session to identify policy priorities earlier in the year;
2. Duplication: It would make sense to integrate the work of the Resolutions and Legislative Committees into a single committee to provide a more coherent approach to policy development and legislative planning; and
3. Engagement: MW seeks to promote broad engagement in this policy process among its members.

Potential Process Changes

1. Timing
    a. Move the resolutions process earlier so that proposed resolutions are submitted by member watershed organizations by June 1.
    b. Distribute all resolutions received quickly back to members to provide an opportunity for members to send comments to the Committee within 10 days.
    c. Committee review of proposed resolutions would be completed by July 1.
    d. Convene a separate one-day meeting of MW delegates on or about August 1 for purposes of deliberating and acting on proposed resolutions.
        i. Convene this meeting in a central location such as St. Cloud; allowing for members to arrive in the evening for a reception and then conduct the business meeting on resolutions the following day. Allow for hybrid remote electronic participation in this meeting.
        ii. MAWA and the Committee would also bring recommendations on an updated Legislative Platform for the members' consideration at the August 1 meeting.
        iii. The Summer Tour in late June is not ideal for addressing resolutions because the schedule is already packed, and the focus is on learning about watershed work in the field. It could be better to add one more meeting for focus on resolutions.
        iv. Adding one more MW member meeting to the calendar will have budget and staffing implications to be considered.
    e. The Legislative Committee (consolidated Resolutions & Legislative Committee, see below) could meet in mid-November after elections and develop recommended legislative priorities.
    f. The annual conference in December can be a time for members to review and approve legislative priorities.
        i. There may be a natural temptation to propose additional resolutions in December; the Bylaws could allow for such consideration, requiring recommendation by the Board of Directors and a super-majority vote for approval.

2. Committee Consolidation
    a. Combine the Resolutions Committee and the Legislative Committee into a single committee that reviews proposed resolutions, recommends updates to the legislative platform and recommends legislative priorities.
    b. Assure that this committee has broad membership and strong leadership.
    c. Promote continuity in policy development and in setting legislative priorities through this arrangement.

3. Engagement
    a. While the MW Board will be involved throughout the process, MW members/delegates will have a new role in approving the legislative priorities at the December annual meeting.
    b. The new process will provide more transparency and engagement opportunities for members, including an initial 10 day early review of all resolutions, and promote greater involvement of members through a strengthened and consolidated committee.
    c. The Bylaws would continue to provide that the Board could reserve authority during the Legislative Session to adjust priorities if circumstances warrant.

Comparative Timelines

The following table illustrates the resolutions, platform, and legislative priorities process as currently constituted and as proposed:

CURRENT PROCESS		PROPOSED PROCESS
August 1	**Notice/solicitation of resolutions**	April 1
October 1	**Deadline for submission of resolutions**	June 1
October 31	**Resolutions reviewed by Committee and Board; packet distributed with recommendations**	July 1
December 1	**Members meeting to consider resolutions and legislative platform**	August 1
January 1 (by Legislative Committee)	**Adoption of MW legislative priorities**	December 1 (by members)

BYLAWS

MINNESOTA ASSOCIATION OF WATERSHED DISTRICTS, INC.

Doing business as Minnesota Watersheds

St. Paul, Minnesota

ARTICLE I.
Offices and Corporate Seal

1.1 Official Name. The official name of the corporation is the Minnesota Association of Watershed Districts, Inc., which conducts business under the registered assumed name of, and is hereinafter referred to as, Minnesota Watersheds.

1.2 Purpose. The purpose of Minnesota Watersheds is to provide educational opportunities, access to information resources, interface with other agencies, facilitate tours, meetings, and lobby on behalf of members. Additionally, Minnesota Watersheds will facilitate the exchange of information to help members better comply with governmental regulations and laws while offering an informed interface with the community or communities being served. Minnesota Watersheds will work to secure the capacity of its members to implement their statutory powers and purposes.

1.3 Organized. The corporation is organized as a 501(c)(4) organization. Notwithstanding any provision of the Articles of Incorporation or Bylaws which may be interpreted to the contrary, Minnesota Watersheds shall not authorize or undertake any actions which jeopardize its status as a 501(c)(4) organization.

1.4 Office. The registered office of the corporation shall be designated by the Board of Directors.

1.5 Corporate Seal. The corporation shall have no corporate seal.

1.6 Manual of Policy and Procedures. The Board of Directors has established a management document identified as the Manual of Policy and Procedures to support the orderly and timely details of regular operation. It may be revised at any time by a majority vote of the Board of Directors.

ARTICLE II.
Membership

2.1 Membership. Each dues-paying watershed district or watershed management organization duly established and in good standing pursuant to Minnesota Statutes, Chapter 103B or 103D, shall be entitled to membership in this corporation.

2.2 Delegates. Alternates. When a watershed district or watershed management organization becomes a member of this corporation, it shall designate from among its board members two delegates to represent it in this corporation. In addition, each member may designate alternate delegates to represent such member in the absence of any originally designated delegate. Thereafter, each member shall annually designate its delegates and alternate delegates so long as it remains a member in good standing of this corporation.

2.3 Termination of Membership. Any member that has failed to pay its dues is not in good standing and shall be stricken from the membership roll.

2.4 Resignation of Member. Any member may withdraw from this corporation effective immediately by notifying the secretary in writing. Regardless of the date of termination, there shall be no refund of the annual dues paid by the member.

ARTICLE III.
Meetings of Membership

3.1 Annual Business Meeting. An annual meeting of this corporation shall be held to transact such business as shall properly come before them. Notice of the time and place of such annual meeting shall be mailed, either physically or electronically, by the secretary to all members at least thirty (30) days in advance thereof.

3.2 Annual Meeting on Resolutions and Petitions. An annual meeting of members of the corporation shall be held for the purpose of considering resolutions and petitions as set forth in Article IX. Notice of the time and place of such meeting shall be mailed, either physically or electronically, by the secretary with the assistance of the executive director to all members at least thirty (30) days in advance thereof. Delegates may participate and vote in such meetings by telephone or other electronic means approved by the Board in the Manual of Policy and Procedures, and determination of quorum and voting shall be as provided in sections 3.4 and 3.5.

~~3.2~~3.3 Special Meeting. Special meetings of the members of the corporation shall be called by the president upon request of a majority of directors of the Board of Directors or upon the written request of one-third of the members of the corporation in good standing. This request shall be in writing addressed to the president or the secretary of the corporation. Within thirty days of receipt of said request, the Board of Directors shall mail (either physically or electronically) notice of said special meeting to all members. This notice shall state the objective of the meeting and the subjects to be considered.

3.4 Quorum for Meetings.

a. Annual Business Meeting. Each dues-paying watershed district or watershed management organization may appoint up to two delegates. A quorum consists of the majority of the delegates registered at the annual conference and in attendance irrespective of whether some have departed. Once a quorum has been established there shall be no further question as to the quorum.

b. Annual Meeting on Resolutions and Petitions, Special Meetings. A quorum for the Annual Meeting on Resolutions and Petitions or Special Meetings consists of at least one delegate from each of fifty percent plus one of the member watershed organizations, and must include at least one delegate from each of the three regions described in Article IV.

~~3.3~~3.5 Voting. Any action taken by the members shall be by majority vote of the delegates present unless otherwise specifically provided by these Bylaws. Each member shall be entitled to one (1) vote for each delegate present.

ARTICLE IV.
Board of Directors

4.1 General Powers. The business activities of the corporation shall be directed and managed by the Board of Directors. The Board of Directors shall be authorized to pay officers and directors of the corporation per diem allowances and expenses as may from time to time be submitted to the Board of Directors, and such other expenses as may from time to time be necessary for the furtherance of

the corporation's business, consistent with the rate and provisions of watershed board member per diem allowances and expense reimbursement provided in state law. The Board of Directors is authorized to hire and/or contract for services needed.

4.2 Directors to be Elected by Regions. For the purpose of election of the Board of Directors, members are grouped into three regions; three Directors shall be elected from each region, with staggered three-year terms. Members from each region shall elect one director for a three-year term at the annual business meeting of Minnesota Watersheds. No watershed district or watershed management organization shall have more than one board member elected to be a Director on the Board of Directors of the corporation. In the event of a vacancy on the Board of Directors, the Board of Directors may appoint a member for the remaining term from a watershed district or watershed management organization with an existing representative on the Board of Directors if there are no other candidates from the region requesting appointment to the position. In the event a vacancy is filled by the Board of Directors, such appointment shall be submitted to the regional caucus for approval at the next regional caucus meeting. Regional caucuses shall elect a Chairman and Recording Secretary report the election results to the Convention at a designated time. The member watershed districts and watershed management organizations present at the Regional Caucus meeting shall have full authority to elect a Chairman, Recording Secretary, and representatives to the Board of Directors.

4.3 Regions. The Board of Directors may re-align the regions or the members contained therein, it being the intent and purpose that each region contain the approximate same number of members. Any watershed district or watershed management organization in Minnesota not presently a member of this corporation, upon admission to membership, will be assigned to a region by the Board of Directors. Regional membership shall be listed in the Manual of Policy and Procedures.

4.4 Number. Qualification, and Term of Office. The number of directors constituting the Board of Directors shall be nine. Each director elected at the annual meeting shall be elected for a three-year term. Directors shall be on the board of a watershed district or watershed management organization that is a member in good standing of this corporation.

4.5 Vacancies. If there be a vacancy among the officers of the corporation or among the directors by reason of death, resignation, termination of membership, or removal as provided by law, the Articles of Incorporation, or these Bylaws, or otherwise or for non-excused absences for three consecutive meetings, such vacancy shall be filled by the Board of Directors until the next Annual Meeting of Minnesota Watersheds.

4.6 Removal of Directors. At a special meeting of the Board of Directors called solely for that reason, the notice of which meeting shall have been given in writing to members of the Board of Directors at least thirty days prior thereto and not more than fifty days prior thereto, a super majority of seven members of the Board of Directors may remove one or more directors from their term of office without cause.

4.7 Meetings. Actions. The Board of Directors shall hold the annual meeting of the Board of Directors immediately after the annual meeting of the members of this corporation, and at such annual meeting shall elect the officers as above provided. Regular meetings of the Board of Directors shall be held at a time and place to be fixed by resolution or adopted by the majority of the Board of Directors.

The majority of the Board of Directors shall constitute a quorum. Directors may participate and vote in Board of Directors meetings by telephone or other electronic means approved by the Board in the

Manual of Policy and Procedures.

Actions may be taken by a majority vote of those Directors present or participating by telephone or other electronic means approved by the Board in the Manual of Policy and Procedures. The Secretary of the Board of Directors, with the assistance of the executive director, shall give written or electronic notice to each director at least seven calendar days in advance of any regular or special directors' meeting. Special meetings may be called at the discretion of the President of the Board of Directors or upon demand in writing to the Secretary by three (3) directors of the Board of Directors.

4.8 Conflicts of Interest. Members of the Board of Directors shall act at all times in the best interests of the corporation. This means setting aside personal self-interest and performing their duties in transacting the affairs of the corporation in such a manner that promotes public confidence and trust in the integrity, objectivity, and impartiality of the Board. No Director shall directly or indirectly receive any profit from his/her position as such, and Directors shall serve without remuneration other than as provided in Section 4.1 of these Bylaws for the payment for reasonable expenses incurred by them in the performance of their duties. The pecuniary interests of immediate family members or close personal or business associates of a director are considered to also be the pecuniary interest of the director.

4.9 Indemnification. All directors and officers of the corporation shall be indemnified against any and all claims that may be brought against them as a result of action taken by them on behalf of the corporation as provided for and subject to the requirements of Chapter 317A of Minnesota Statutes as amended.

ARTICLE V.
Board Officers

5.1 Officers and Duties. There shall be four officers of the Board of Directors, consisting of a President, Vice President, Secretary, and Treasurer. All officers shall be directors of the corporation. Their terms and duties are as follows:

5.2 President. The President shall serve a term of office of one year and may, upon re-election, succeed himself/herself for two additional successive terms. The President shall have the following duties:

- Convene and preside over regularly scheduled and special meetings of the Board of Directors and annual or special Minnesota Watersheds membership meetings.
- Have general powers and duties of supervision and management as directed by the Manual of Policy and Procedures.
- Appoint such committees as he/she shall deem necessary with the advice and consent of the Board of Directors.

5.3 Vice President. The Vice President shall serve a term of office of one year and may, upon re-election, succeed himself/herself for two additional successive terms. The Vice President shall have the following duties:

- Assume and perform the duties of the President in case of his/her absence or incapacity; and shall chair committees on special subjects as designated by the President.
- Have general powers and duties of supervision and management as directed by the Manual of Policy and Procedures.

5.4 Secretary. The Secretary shall serve a term of office of one year and may, upon re-election, succeed

himself/herself for two additional successive terms.

The Secretary shall be responsible for preparing and keeping all records of board actions, including overseeing the taking of minutes at all board meetings, sending out meeting announcements, distributing copies of minutes and the agenda to each director, and assuring that corporate records are maintained.

5.5 Treasurer. The Treasurer shall serve a term of office of one year and may, upon re-election, succeed himself/herself for two additional successive terms.

The Treasurer shall Co-chair the finance committee, maintain account of all funds deposited and disbursed, disburse corporate funds as designated by the Board of Directors, assist in the preparation of the budget, collect membership dues, and make financial information available to board members and the public.

ARTICLE VI.
Committees

6.1 Committees. Committee co-chairs shall be appointed by the Board of Directors. All committees shall have co-chairs.

ARTICLE VII.
Fiscal Year, Dues and Annual Review of Financial Procedures

7.1 Fiscal Year. The fiscal year of the corporation shall end on September 30 each year.

7.2 Membership Dues. Dues will be determined annually by the Board of Directors as specified in the Manual of Policy and Procedures.

7.3 Annual Dues. Annual dues shall be payable in January of each year. If a member's dues are not paid on or before April 30 of each year, such member's name shall be stricken from the membership roll. Reinstatement shall be upon such terms and conditions as prescribed by the Board of Directors.

The Board of Directors shall have the authority to suspend or defer dues of any newly organized watershed district or watershed management organization that joins this association until such member watershed district or watershed management organization is in actual receipt of its first authorized fund. The Board shall send out the annual dues statement with payment directed to the Minnesota Watersheds accounting firm. The Board of Directors may consider deferring, suspending, or reducing dues to new members or on an individual case basis when an appeal is made by a member because of hardship or funding problems.

7.4 Annual Review of Financial Procedures. The Board of Directors of this corporation shall provide for an annual review of financial procedures of all its resources and expenditures. A full report of such review and financial status shall be furnished at each annual meeting of the members. This review will be conducted by an auditing firm selected by the Board of Directors with experience in the field of government and water management. The review results shall be furnished to all members within forty-five days after receipt thereof by the Treasurer.

ARTICLE VIII.
Employees

8.1 Employees. At the discretion of and under the direction of the Board of Directors, Minnesota Watersheds may choose to hire and administer various employees. Their positions and job expectations shall be individually developed and included in the Manual of Policy and Procedures.

ARTICLE IX.
Resolutions and Petitions

9.1 Resolutions: The Co-Chairs of the Minnesota Watersheds Resolutions ~~&~~ and Legislative Committee will send a request for resolutions, along with a form for submission, to the membership at least four ~~three~~ months prior to the Aannual ~~Minnesota Watersheds membership~~ Mmeeting on Resolutions and Petitions. Resolutions and their justification must be submitted to the Minnesota Watersheds Resolutions ~~&~~and Legislative Committee in the required format at least two months prior to the Aannual ~~Minnesota Watersheds membership <~~meeting on Resolutions and Petitions for committee review and recommendation. The committee will present these resolutions and their recommendations to the Board of Directors and the Minnesota Watersheds membership at least one month prior to ~~the start of~~ the Aannual ~~Minnesota Watersheds membership~~ Mmeeting on Resolutions and Petitions. The Board of Directors may make additional recommendations on each proposed resolution through its board meeting process. This same procedure will be used when policy issues are to be considered at any special Minnesota Watersheds membership meeting. All resolutions adopted at the Annual Meeting on Resolutions and Petitions shall be considered adopted by the members. Any resolutions to be considered at the Annual Business Meeting must be recommended by the board of directors and require a two-thirds majority vote of the members to be adopted.

9.2 Petitions: Any member or group of members may submit to the Board of Directors at any time a petition requesting action, support for, rejection of, or additional information on any issue of potential importance to the members. Such petitions require signed resolutions from at least 15 members before a special meeting of the membership will be convened.

ARTICLE X.
Chapters

10.1 Chapters. Members may form chapters to further the purposes stated in Article II of the Articles of Incorporation, to carry out policies of the Board of Directors, and to suggest policies for consideration by the Board of Directors.

ARTICLE XI.
Rules of Order

11.1 Rules. When consistent with its Articles of Incorporation and these Bylaws, the current edition of Robert's Rules of Order Newly Revised shall provide guidance to the proceedings of this corporation. For consistency in operation, a copy shall be available for consultation if requested at every scheduled meeting of the Board of Directors and Membership meetings.

ARTICLE XII.
Amendments

12.1 Amendments. These Bylaws may be amended by a majority vote of the members of this corporation only as provided below.

12.2 Annual Business Meeting. At the annual business meeting of the members of this corporation, the Bylaws may be amended by the majority of the members present if there is a quorum at said annual

meeting and due notice has been given to the membership of the changes 30 days in advance of the meeting.

12.3 Special Meeting. These Bylaws may be amended by the members at a special meeting called for that reason but only by a majority vote at a meeting where fifty percent plus one of the member watershed organizations are present~~of the entire membership of the corporation~~, and only if there has been thirty days' written notice to all members of such special meeting. Such special meeting may be called upon the request of one-third of the members of this corporation by notice in writing to the secretary or president, which notice shall ask for said special meeting and shall state the proposed Bylaws changes, and upon receipt of such request, the Secretary or President must send written, either by mail or electronically, notice of the meeting to the members of this corporation within thirty days of receipt of such request, which shall be not less than thirty days nor more than fifty days of the date of the written notice.

****

Project and Program Status Reports

****

RAMSEY-WASHINGTON METRO WATERSHED DISTRICT

BARR

Memorandum

To: Board of managers and staff
From: Tina Carstens, Brad Lindaman, Erin Anderson Wenz, and Brandon Barnes
Subject: Project and program status report: March 2025
Date: February 26, 2025

Note: The location, brief description, and current status of each project described below can be found on the *2025 Ramsey-Washington Metro Watershed District (RWMWD) engineering services story map*.

Project feasibility studies

A. Manufactured homes resilience evaluation (Barr project manager: Tyler Olsen; RWMWD project manager: Paige Ahlborg)

The purpose of this project is to complete an inventory of manufactured home developments within the RWMWD, identify potential project opportunities to increase resilience to regional flooding, reduce localized flood risk, improve water quality, and connect with developments to provide information on opportunities to improve stormwater conveyance and/or water quality within each development.

During this period, Barr reviewed Ramsey County data sources for manufactured home developments and compared it against the Metropolitan Council data we previously obtained. Earlier this year, Barr and RWMWD applied for a SWC Resiliency Planning Grant from the MPCA, and last month we were notified that this project was awarded a grant that will cover planned tasks for the project. RWMWD staff are working with the MPCA to finalize the grant agreement. We anticipate that some interim milestones will be modified to match the schedule in the grant agreement, but the project is still anticipated to be completed later this year.

B. Street sweeping (Barr project manager: Michael McKinney; RWMWD project manager: Paige Ahlborg)

The purpose of this study is to support the 2025 enhanced street-sweeping grant program.

Barr finalized a technical memorandum summarizing the 2024 enhanced street-sweeping program and provided it to the RWMWD on January 24 to review and discuss at the February board meeting. In 2025, Barr will continue to support the RWMWD with the implementation of the enhanced street-sweeping grant program, including municipal coordination, identification of priorities, and technical analysis.

C. Flood risk reduction feasibility study: Roseville Central Park (Barr project manager: Tyler Olsen; RWMWD project manager: Paige Ahlborg)

The purpose of this project is to identify strategies or combinations of strategies and system modifications that would remove habitable structures near Central Park in Roseville from the 100-year floodplain.

During this period, Barr began a screening-level identification of potential system modifications to reduce flood levels in the project area. The evaluation includes identification of outlet control structures, overflow elevations, public parcels where more water could be stored during a flood event, and low habitable structures near Central Park and adjacent to other public parcels where flood levels may change because of modifications to the system. Additionally, we completed minor model updates to the existing-conditions XPSWMM model for the area. Barr will review the potential modifications with the RWMWD and the City of Roseville in the coming weeks before beginning more detailed modeling to support the development of feasibility-level concepts to reduce flood risk.

Watershed management plan update

D. Watershed management plan update: phase 1 stakeholder engagement (Barr project manager: Greg Williams; RWMWD project manager: Tina Carstens)

The purpose of this project is to help the RWMWD collect and interpret partner input as the district updates its watershed management plan.

At the January 21 public works forum, Barr presented the plan update process and received feedback from municipal and county partners. Barr also facilitated a workshop with RWMWD staff on February 11 to discuss priority issues for plan development and align plan-related engagement activities with the RWMWD's broader engagement request for proposals. We began drafting a memorandum outlining plan engagement activities to be submitted to the Board of Water and Soil Resources for comment. Project next steps include a CAC issue identification workshop and Board workshops to discuss priority issues (one was held on February 24, 2025; a second workshop will be held prior to the April Board meeting).

Research projects

E. Wakefield Lake aeration feasibility study (Barr project manager: Tyler Olsen; RWMWD project managers: Paul Erdmann and Eric Korte)

The purpose of this project is to evaluate the effectiveness of increasing dissolved oxygen concentrations in Wakefield Lake via aeration methods to control internal phosphorus loading.

Barr finalized the memorandum for the new-technology mini case studies that summarizes a variety of aeration methods for shallow lakes. This evaluation aligns with the first task of the Wakefield Lake aeration feasibility study, which is to complete an alternatives analysis of aeration and internal phosphorus control technologies. The results of the case study memorandum will be used to identify areas for further investigation.

Project operations

F. 2025 Tanners alum facility monitoring (Barr project manager: Meg Rattei; RWMWD project manager: Eric Korte)

The purpose of this project is to complete the monitoring and reporting required by the general National Pollutant Discharge Elimination System (NPDES)/State Disposal System (SDS) permit for municipal separate storm sewer systems (MS4s).

The Tanners alum plant has been shut down for the season and will resume operation in the spring. The RWMWD and Barr will summarize 2024 data, prepare the 2024 facility report required by its MS4 permit, and submit the report to the Minnesota Pollution Control Agency (MPCA).

G. Lake-level station maintenance and rain gauge installation (Barr project manager: Chris Bonick; RWMWD project manager: Dave Vlasin)

The purpose of this project is to continuously measure and record lake levels and display real-time and historical data in graphs on the RWMWD website for the following lakes: Phalen, Snail, Owasso, Wabasso, West Vadnais, Battle Creek, Tanners, Spoon, and Twin. Typical operation and maintenance tasks for the lake-level stations and associated web pages continue. A few station-specific updates are included below.

Lake level graphs

Ice conditions remain on all lakes as of February 24.

Tanners Lake station

The HSA bubbler system has been replaced with a Campbell Scientific radar sensor. During the first few years, the bubbler system experienced repeated issues, mainly due to the long run of the river line (i.e., the airline) into the lake and heavy vegetation around the sensor. The RWMWD and Barr determined that installing a radar sensor inside a stilling well on the lake's shore would be a better option. The new radar sensor has been temporarily mounted on a post that stands in the lake. It will be moved once the stilling well has been constructed in 2025.

New rain gages (Phalen, Tanners, Owasso, West Vadnais, Spoon, Snail, and Twin)

The RWMWD continues to consider options for displaying the data on its website for the rain gages installed last year. Adjustments to the display are likely this spring.

H. Lake-level station forecast integration (Barr project manager: Greg Fransen; RWMWD project manager: Eric Korte)

The purpose of this project is to develop a tool that analyzes rainfall forecasts and current lake level information and then recommends when the control structures for Lake Phalen and Keller Creek should be operated. The goal is to develop a tool that can be used to automate adjustment of the control structures so that the RWMWD does not have to manually monitor rainfall forecasts and to format the tool so that it can be provided to In Control, Inc. in the future to update the programable controls for the outlets.

This month, Barr held a kickoff meeting to review the project scope. In an initial discussion with In Control, Inc., we confirmed that the tool's format will enable it to be used for future updates to the outlet structure controls. Over the next few months, we will automate the import of rainfall forecast information into the tool. This project is anticipated to continue until fall 2025.

Capital improvements

I. Roosevelt Homes (Barr project manager: Marcy Bean; RWMWD project manager: Paige Ahlborg)

The purpose of this project is to create construction documents for a multi-phase flood management and water quality improvement project at the Roosevelt Homes public housing area in Saint Paul.

We anticipate that the third phase of the Roosevelt Homes project will be advertised for bid this month. A summary memorandum describing the final phase of this project is included in this month's board packet.

The board should consider a motion to accept the final design, scope of work, and estimate of probable construction costs and approve advertisement for bid. Assuming board support, bids will be due in late March, with a recommendation to award made at the April meeting and construction beginning as early as May. Project drawings depicting the preliminary design, scope of work, and opinion of probable construction costs have been included with this board packet.

Roosevelt Homes is a flood-prone multifamily housing area owned by the Saint Paul Public Housing Authority. During the first part of this multi-year phased retrofit, two stormwater basins were constructed in late 2023. The vegetation components were planted in 2024. Construction of the Phase 3 improvements are being funded in part through an MPCA Implementation Grant for Stormwater Resilience.

J. Targeted retrofit projects 2025 (Barr project manager: Marcy Bean; RWMWD project manager: Paige Ahlborg)

The purpose of this project is to design BMP retrofits on previously identified commercial, school, and faith-based properties in the district, as well as to provide bid assistance and oversee construction.

BMP retrofits at Cochran Recovery Services and Maplewood Toyota, both in Maplewood, are proposed to be advertised for bid this month. These projects include pretreatment, improved overland flow and storage to reduce flooding, and conversion of turf to native plantings. A summary memorandum describing these projects is included in this month's board packet.

The board should consider a motion to accept the designs, scope of work, and estimate of probable construction costs and approve advertisement for bid. Assuming board support, bids will be due in late March, with a recommendation to award made at the April meeting and construction beginning in June Project drawings depicting the 90-percent design, scope of work, and opinion of probable construction costs have been included with this board packet.

K. Stewardship grant program (Barr project manager: Marcy Bean; RWMWD project manager: Paige Ahlborg)

The purpose of this project is to 1) provide BMP design and review services to cost-share applicants throughout the RWMWD on an as-needed basis and 2) support the development of the stewardship grant program.

During this period, Barr reviewed the cost-benefit database and prepared to add the projects that were implemented in 2024. The cost-benefit database is a compilation of all permit, stewardship grant and targeted retrofit projects that have been implemented throughout the RWMWD, with estimates for their water quality benefits. The database is used to keep a record of these projects and is leveraged in reporting TMDL progress.

L. Pioneer Park stormwater reuse (Barr project manager: Jennifer Koehler; RWMWD project manager: Paige Ahlborg)

The purpose of this project is to complete final design, plans, and specifications for a stormwater reuse system in Pioneer Park that will reduce both the use of groundwater for irrigation and phosphorus loads to downstream water bodies.

Work on this project was minimal in January and February. Barr does not anticipate any additional work until spring 2025, at which time Peterson will start up the reuse system in the spring and train the RWMWD and the city to prepare the system for the 2025 irrigation season.

M. Fish Creek tributary improvements (Barr project manager: Tyler Olsen; RWMWD project manager: Tina Carstens)

The purpose of this project is to design and implement vegetation improvements around Double Driveway Pond, as well as stream stabilization improvements in the Fish Creek tributary upstream.

This period, Barr and the RWMWD continued drafting a construction access agreement for work on the Bailey Nurseries property, and the district's legal counsel has reviewed the agreement. Once finalized, the agreement will be sent to Bailey Nurseries for signature. In early 2025, Barr and the RWMWD will outline a proposed schedule for bidding and construction. We will update the board of managers when a schedule has been set.

N. Cottage Place wetland regeneration (Barr project manager: Brendan Dougherty; RWMWD project manager: Paige Ahlborg)

The purpose of this project is to design and restore a degraded wetland on the City of Shoreview property near the Cottage Place cul-de-sac. The project will involve plans development, bidding, and construction administration to provide additional stormwater treatment and restore wildlife habitat in the area.

This month, Barr continued coordinating construction activities with Dimke Excavating. Major earthwork activities have not yet started due to deep levels of frost. The contractor will resume

construction activities in March.

O. County Road C culvert replacement (Barr project manager: Tyler Olsen; RWMWD project manager: Paige Ahlborg)

The purpose of this project is to design and construct a box culvert where Kohlman Creek crosses under County Road C (owned by Ramsey County) in Maplewood. The culvert was identified as a flood risk reduction improvement project in the Kohlman Creek flood risk reduction feasibility study.

During this period, Barr continued coordinating the final payment application with Bituminous Roadways, who is requesting additional information from its subcontractors to prepare the application. We anticipate submitting this application for the April board meeting. Construction for County Road C improvements are being funded by Ramsey County.

P. Kohlman Creek storage and detention (Barr project manager: Tyler Olsen; RWMWD project manager: Paige Ahlborg)

The purpose of this project is to design multiple flood risk reduction improvement projects previously identified in the Kohlman Creek flood risk reduction feasibility study. The improvement projects include PCU Pond T grading, 13th Avenue storm sewer improvements, and berm grading and outlet installation in the backyards of homes along County Road C.

During this period, Barr coordinated geotechnical drilling with our subcontractor for the second berm site near County Road C; drilling was delayed from the end of January/early February due to weather. Drilling for the second site is scheduled for the last week of February. We will continue reviewing and analyzing the collected geotechnical data to inform any required soil corrections or design recommendations for the two projects. Additionally, work continued on development of plans and construction documents, and we anticipate providing the plan set to project partners for review later this spring and are tentatively planning for construction later this summer.

Q. Lake Wabasso outlet replacement (Barr project manager: Brandon Barnes; RWMWD project manager: Dave Vlasin)

The purpose of this project is to design a new outlet for Lake Wabasso. The existing outlet was constructed in 1971 and has reached the end of its design life. Ramsey County determined that the outlet has been leaking beneath the weir wall for several years and that rebuilding the structure is necessary to prevent further seepage. The county requested RWMWD support for a design that both prevents seepage and avoids adverse impacts to floodplain elevations.

The Lake Wabasso outlet structure, constructed in 1971, is located on the north end of the lake between 3558 Tiffany Lane and 3515 Ernal Drive in Shoreview. Ramsey County conducts routine maintenance for the lake outlet. The existing structure is a grated steel footbridge supported by wingwalls that are part of the weir structure directing flow through the outlet channel. The wingwalls show signs of cracking, and the base slab in the channel is also deteriorating. The proposed improvements include a new footbridge and weir and sheet pile cutoff to reduce seepage.

This month, Barr continued working on preliminary plans for the outlet replacement. These plans will be available for the RWMWD and Ramsey County to review in March. Barr anticipates finishing the plans later this spring, with construction in fall 2025. Ramsey County will reimburse the RWMWD for construction costs.

R. Kohlman Lake alum treatment (Barr project manager: Tyler Olsen; RWMWD project manager: Paul Erdmann/Eric Korte)

The purpose of this project is to collect the required information and design an alum treatment for Kohlman Lake in Maplewood.

During this period, Barr continued evaluating the data collected for Kohlman Lake, including the sediment data Barr collected, the macrophyte data Ramsey County collected in 2024, and historic sediment and water quality data collected on Kohlman Lake. Additionally, Barr helped the RWMWD in prepare for a February 18 meeting with Ramsey County and the Minnesota Department of Natural Resources to develop a plan for controlling aquatic invasive species (curly-leaf pondweed) and improving water quality in Kohlman Lake. The RWMWD and Barr will prepare an alum management plan for pre- and post-alum treatment to control curly-leaf pondweed and measure the progress of water quality and macrophyte management. We will develop this plan and prepare an herbicide treatment permit application for the DNR over the next month to prepare for a spring 2025 herbicide treatment for curly-leaf pondweed. At this time, we anticipate an alum treatment in spring, 2026, depending on the effectiveness of macrophyte management activities.

Capital improvement plan (CIP) project repair and maintenance

S. 2025 CIP maintenance and repairs (Barr project manager: Gareth Becker; RWMWD project manager: Dave Vlasin)

The purpose of this effort is to maintain the RWMWD's existing capital improvement projects.

During this period, the contractor completed site 4 (Gervais Creek maintenance), site 9 (Harbor Place pond maintenance), site 10 (Arlington Avenue and Currie Street pond maintenance), site 13 (SC220 pond maintenance), and site 14 (SC235 pond maintenance). Site 11 (Kowalski ponds maintenance) is nearing completion, and site 5 (McKnight Basin pond maintenance) has been mobilized and hauling started. With the current higher than normal temperatures and the possibility of continued warmth, we have requested an updated plan to complete the remaining pond work. The remaining non-pond cleanout sites pose little risk being completed during warmer weather. Change order 1, which involves adding two new structures to site 13 in Woodbury, is included in this board packet. These new structures will address erosion and bring emergency overflows in line with Woodbury standard plates. The City of Woodbury requested these structures and will reimburse the RWMWD. Payment application 1 is included in this packet.

T. Beltline Mississippi Branch outfall replacement project (Barr project managers: Joe Welna and Nathan Campeau; RWMWD project manager: Dave Vlasin)

The purpose of this project is to replace the final approximately 70 feet of the Beltline interceptor adjacent to the Mississippi River that failed in July 2023.

During this period, Barr helped the RWMWD review submittals, coordinate with and review design drawings to protect and design repairs to Port Authority infrastructure that had deteriorated from the Port Authority's contractor (as a subconsultant to Barr) and observe construction. Minger, the contractor, completed demolition and removal of the old steel pipe and manhole structure, placed the new nine-foot diameter concrete pipe, and poured the base slab for the new manhole. Construction and repair are scheduled to continue through March 2025.

U. Beltline and Battle Creek storm sewer five-year inspection and Beltline detailed survey (Barr project managers: Tyler Fincher and Nathan Campeau; RWMWD project manager: Dave Vlasin)

The purpose of this project is to complete the five-year inspections of the Beltline storm sewer interceptor and Battle Creek storm sewer, as well as a detailed survey of the Beltline storm sewer interceptor.

The RWMWD inspects the entire length of the Beltline and Battle Creek storm sewers every five years using the National Association of Sewer Service Companies' (NASSCO) Pipeline Assessment Certification Program (PACP) standards. The NASSCO PACP rating system is the industry standard for identifying pipe deficiencies and rating the overall quality of pipes and storm sewer systems.

The RWMWD and Barr will perform a detailed inspection along the entire Beltline and Battle Creek storm sewers. Barr will also conduct a detailed survey of the entire Beltline system to determine the location and elevation of the tunnel to form the baseline for future rehabilitation projects, inform other storm sewer infrastructure projects that need to connect to the Beltline, and avoid conflict with other infrastructure projects (e.g., roadway improvements).

During this period, Barr performed inspections and detailed inspections of most of the Beltline tunnel system (except for the final section that is currently under repair). The inspections are on track; weather and construction permitting, the inspections and survey will conclude in March.

V. Natural resources update: Paul Erdmann

Restoration work along Keller Creek The NR crew took advantage of some favorable weather early in February to remove buckthorn and other weedy tree and shrub species along a section of Keller Creek, just north of Round Lake. This section is part of the Keller Habitat Enhancement Project, a collaboration with Ramsey County. NR staff also performed some CIP maintenance by removing trees from one of the weirs in Kohlman basin.

Always Learning Pat and Joe are newly certified Minnesota Tree Inspectors after attending courses by the University of Minnesota Extension and DNR. This expertise will help us manage trees on our managed sites and in our urban forest by managing for tree health and monitoring for new exotic

insects and diseases. Paul continues his Leadership Essentials courses, attending Team Communications and Conflict Resolution courses in February.



Joe at the UW-River Falls Career Fair

On February 25th, we will be **hosting Urban Roots** for a presentation, tour, and natural resources activity at Gervais Mill Pond. Urban Roots is a youth development program and one of the largest youth employers on the East Side. They create economic and educational opportunities for under-resourced, majority BIPOC youth, preparing them for academic and professional success while addressing community needs around fresh food access, the environment, and wellbeing. In 2024, Urban Roots assisted the District with invasive plant management on Lake Phalen and Keller Creek, and also assisted with a planting on Keller Island. We hope to continue this partnership in the years to come.

We also attended the Washington County Cooperative Weed Management Area 2025 Strategic Planning session, several other meetings, tabled at career fairs, attended webinars and an online conference. Intern hiring continues as does webpage updates.

W. Communications and engagement: Lauren Hazenson and Carrie Magnuson

February was an active month for watershed education, with over 500 students participating in hands-on learning activities focused on water quality and native plant restoration. The water quality lessons allowed students to explore key indicators of aquatic health using professional testing tools. Despite minor equipment challenges, students engaged in meaningful scientific investigations, learning to analyze and interpret environmental data.



<u>Farnsworth Aerospace Elementary (Feb 5-6)</u>

A total of 108 students from four 3rd/4th grade classes participated in a water quality lesson led by Water Quality Technician Kyle Kubitza. Teachers involved in the program were Kia Thor, Paul Teske, Malina Xiong, and Sara Young. Students learned about key indicators of water health, including pH, temperature, dissolved oxygen, clarity, and conductivity. They worked with professional tools to test water samples from Lake Phalen and compared their results to technician readings, fostering hands-on learning and scientific inquiry.

<u>St. John Catholic School</u>

On February 11, 11 seventh-grade students took part in the second phase of their planting curriculum, which focused on planting native seeds stratified in December. The seeds included pale purple

coneflower, prairie blazing star, grey-headed coneflower, and anise hyssop. Students alternated between planting activities and creating 3D models of their assigned native plants. Volunteers, including Ramsey County Master Gardener Michael Erb and Citizen Advisory Committee member Randee Edmundson, assisted with the soil preparation and planting process.

The sixth-grade students engaged in a two-day water quality lesson on February 12-13, led by Water Quality Technician Lyndsey Flaten. On the first day, students participated in a classroom demonstration on dissolved oxygen using a color-changing kit and a pH experiment with indicator strips. On the second day, they conducted their own water tests using samples collected from Gervais Mill Ponds and compared results to professional readings, enhancing their understanding of watershed health.

St. Peter Catholic School (Feb 19)

A fifth-grade class of 21 students participated in a water quality lesson led by Lyndsey Flaten. They learned about essential water quality parameters and tested water samples from Casey Lake. Although the Sonde device was broken, limiting comparative data collection, students were still able to analyze other water indicators and discuss their findings on lake health.

Weaver Elementary (Feb 20)

Three fifth-grade classes, totaling 81 students, engaged in a native plant restoration project. The students planted 18 different native species and created 3D models of their assigned plants to better understand their growth and characteristics. Volunteers from Ramsey County Master Gardeners provided guidance in two shifts, helping students prepare soil, plant seeds, and organize their models. This hands-on activity encouraged students to connect with environmental restoration efforts.

Urban Roots Tour (Feb 25)

A group of 14 high school students toured the watershed district office and Gervais Mill Ponds, led by staff members Carrie Magnuson, Patrick Williamson, Paul Erdman, and Joe Tillotson. The tour introduced students to watershed management, natural resource programs, and specific projects related to land and aquatic management, including carp control and restoration efforts. If time permits, the group will also participate in hands-on seed dispersal to contribute to ongoing restoration work.

Island Lake Elementary (Feb 25 & 27)

Five fifth-grade classrooms, comprising 140 students, participated in a water quality lesson with Water Quality Technicians Kyle Kubitza and/or Lyndsey Flaten. Students tested water samples from Lake Owasso, analyzing key indicators such as pH, temperature, dissolved oxygen, clarity, and conductivity. Unfortunately, the Sonde device was not operational, limiting comparative analysis. This event is scheduled to take place later in the month, so no photos are available yet.

Central Park Elementary (Feb 26)

A total of 120 students from four 5th/6th grade classrooms took part in a water quality lesson with technicians Kyle Kubitza and/or Lyndsey Flaten. Similar to other schools, students conducted tests on Lake Owasso water samples and discussed their findings on lake health.

Spring Online Workshops

GreenCorps member Cooper has organized two online workshops led by RWMWD staff that focus on lawn alternatives:

Bring Nature Home by Losing Some Lawn

March 20
6:00 - 7:30 PM
Lawns are America's No. 1 irrigated crop, and we spend billions each year on their upkeep. Our love of lawns impacts water quality, our drinking water supplies, biodiversity, and our environment. Learn how converting lawns to sustainable alternatives can be a win-win for people and the environment.

Rain Garden Maintenance
April 10
6:30 - 7:30 PM

Join RWMWD staff to learn more about rain garden maintenance! We'll give an overview of routine maintenance and how to determine if your rain garden needs extra care. Staff will also discuss tips and tricks for plant identification and other helpful resources to make your rain garden a success.

Management Plan Public Engagement

This month, we focused on developing a public engagement plan for the RWMWD Management Plan update. This included editing and publishing the RFP notice for an engagement consultant, meeting with Barr Engineering and staff leadership to understand public input needs further, and creating a draft plan for public engagement events.

The RWMWD public engagement plan is expanded from the one conducted for the management plan published in 2016, with eight total community engagement events compared to the previous three.

Initial Community Input Gathering

We will plan three open houses serving areas with higher RWMWD awareness numbers and are mostly outside of the equity priority area:

- Shoreview, Roseville, and Little Canada
- White Bear Lake, North St. Paul, Vadnais Heights, Gem Lake, and portions of Maplewood
- Woodbury and Oakdale

RWMWD staff will plan and facilitate these events with the support of district volunteers, including those from the Outreach and Engagement Volunteer Program and the CAC. We aim to schedule two open houses before WaterFest, which will serve as the public kickoff event required by the Board of Soil and Water Resources. The Engagement Department will also staff tables with input-gathering activities at community events and farmer's markets in this area.

Priority Area Engagement

These sections reported lower levels of RWMWD awareness in our community survey compared to other portions of the district, and the majority of the region is in our highest equity priority category (see map below).

- Along the northern portion of the I-94 corridor: portions of Maplewood, St. Paul, Oakdale, and Landfall
- Near Lake Phalen: St. Paul, portions of Maplewood
- Battle Creek area

RWMWD will hire an engagement consultant with experience in equitable public participation practices with the same or similar communities to conduct five community engagement events designed to eliminate participation barriers, such as transportation, childcare, work hours, or other considerations.

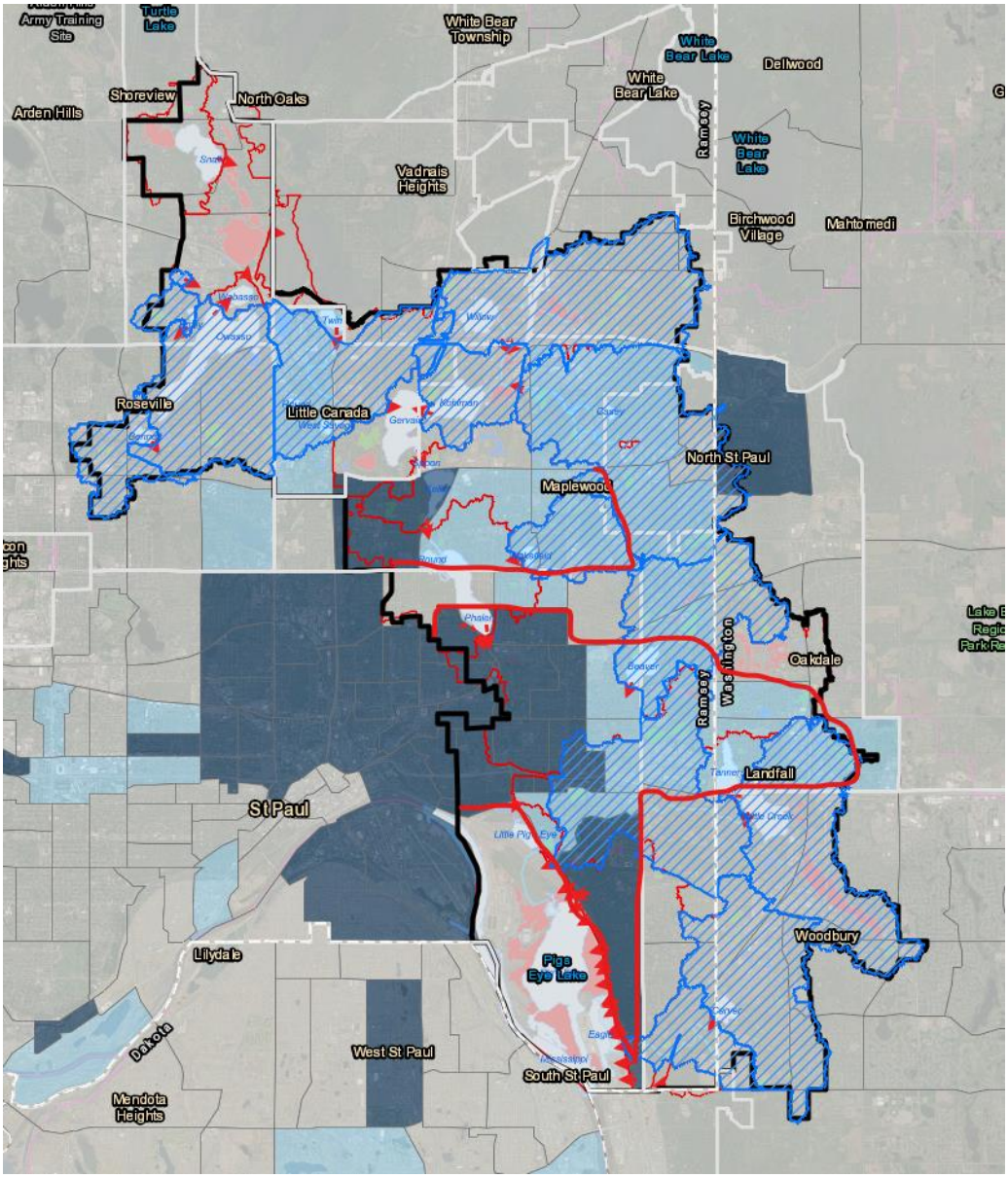

Stewardship Grant Mentorship Program

We partnered with the Stewardship Grant program staff and Ramsey County Master Gardeners to outline a pilot that addresses the need for more one-on-one maintenance guidance for grant recipients.

Master Gardener volunteers will receive specialized training on native plant and weed identification and act as mentors at on-site appointments throughout the growing season. If successful, the program will expand to include other trained volunteer groups. A rough volunteer schedule, training plan, and launch date are finished. Now that the program structure is complete, the Engagement Department will phase out to a promotions and volunteer management support role.

50th Anniversary Planning and Watershed Week

Staff reviewed a draft of the 50th anniversary logo and sent feedback for the final version. We also explored one interactive art installation option for the September celebration.

Watershed Week

A staff work team decided on the following activities for Watershed Week, which will take place August 2nd – 9th:

- Lake Phalen Chain Bike Tour
- Eastside St. Paul National Night Out, with expanded activities
- Watershed Trivia Night
- Family Fishing Day

Chloride Pollution Outreach

Cooper staffed a table at the Oakdale Public Library on February 23 and at a community event at Battle Creek Park on March 1. The table setup and customized handouts were created to inform anglers and others interested in water recreation about chloride's negative impacts on water quality. We will continue to utilize these materials when hosting fishing events or tabling in communities near lakes.

Phalen Freeze Fest - Saturday, February 22



Our team partnered with staff from Capitol Region Watershed District to host an “Adopt-A-Drain Bowling" activity designed by Carrie Magnuson at this popular community event hosted by St. Paul Parks and Recreation. The bowling ball and pins illustrated how adopting a drain could help remove common pollutants from stormwater. She also designed a magnetic-poetry-style activity to gather community values around water. We also provided basic district information, Adopt-A-Drain activity books, and smart salting handouts. All department staff and CAC volunteers Gary Schroerer and Randee Edmundson staffed the booth during the event, which was a huge hit in the ideal winter weather.

Additional Staff Activities

- 2/11/25 – Citizen Advisory Committee meeting (see separate report)

- 2/12/25 – Watershed Partners Meeting
- 2/13/25 – Blue Thumb Steering Committee Meeting
- 2/19/25 – Watershed Partners Steering Committee Meeting

Newsletter
Opens: 47.5%
Clicks: 4.4%
Audience: 1,649

Social Media (Facebook, YouTube, Instagram, LinkedIn)

Facebook

Reach: 1,145
Engagement (likes, shares): 79
Followers: 1,724

Instagram

Reach: 574
Engagement: 29
Audience: 979

YouTube

Views: 1,434
Watch time (hours): 27.8
Subscribers: 355
Viewers: 1,200 (approx.)

LinkedIn

Reach: 1,514
Audience: 487

X. Citizen Advisory Committee (CAC): Carrie Magnuson

The Citizen Advisory Committee met on February 11th 2025, at 6:30 pm at the RWMWD office, and Zoom.

In attendance were 13 CAC members & 1 staff member, 1 Board of Managers, and 1 Green Corps Intern. The following initiatives were discussed and further developed.

1. **Annual Organizational Tasks**
   - **a.** Leadership change: The group held an online vote for two new leadership positions. Glen Olson and Megan Taylor (fka Frisvold) will serve as Co-Chairs for 2025.
   - **b.** Member Renewal: All existing members wish to renew their service for 2025. They are as follows with their representation:
     - John Chikkala (Woodbury)
     - Jill Danner (St. Paul)
     - Randee Edmundson (Schools)
     - Hallie Finucane (Roseville)

- Dana Larsen-Ramsay (Business Community)
- Gary Nelson (Maplewood)
- Glen Olson (North St. Paul)
- Scott Ramsay (Shoreview)
- Gary Schroeher (White Bear Lake)
- Karen Wold (Master Naturalist)
- Jennifer Wickre (Environmental Agency/Organization)
- Cliff Aichinger (At-Large, St. Paul)
- Rachel Finberg (At-Large, St. Paul)
- Megan Taylor (fka Frisvold) (At-large, Maplewood)
- Kathryn Keefer (At-large, Shoreview)
- Stuart Knappmiller (At-large, St. Paul)
- Tammy McCulloch (At-large, Woodbury)

2. Outreach & Engagement Volunteer Program

a. General volunteer opportunities: CAC will have an opportunity to volunteer at a variety of events being held this month as well as throughout the year. These include (but not limited to)

- The Phalen Freeze (2/22/25)
- Chloride outreach to anglers (2/23/25)
- WaterFest (5/31/25)
- Watershed Week (August 3-9)
- RWMWD 50th Anniversary events (TBD)

b. Management Plan Workshop: The CAC will have a workshop with a similar framework to the one completed by the RWMWD Staff and the upcoming workshop with the Board of Managers. This workshop will take place at the April 22nd meeting.

c. Outreach & Engagement Volunteer Program Pilot: The RWMWD Communications team is looking to expand community outreach in targeted areas where we have projects and/or where we have not previously done outreach. CAC members were asked to take part in this pilot to give feedback on the program itself as well as review other volunteer opportunities they've taken part of in RWMWD and elsewhere. The goal of this program will be to build relationships within the community with the support of the CAC members who live and work in them.

Future meetings: April 22nd, June 10th, September 23rd, December 2nd